COMMUTATEURS COAXIAUX

DOC 1964

Radiall

Série CCR à 6 ou 12 POSITIONS de SORTIE

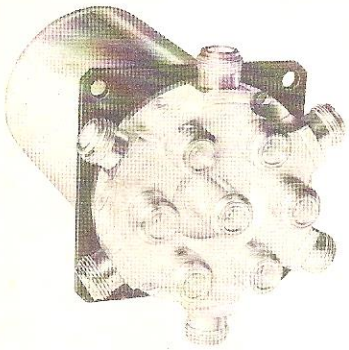

- Les 6 sorties sont axiales dans les modèles 6 positions.
- Prises de série N
- R.O.S. < 1,15 de 0 à 2 GHz. < 1,30 de 2 à 4 GHz.
- Affaiblissement de réjection :
  > 80 dB jusqu'à 1 GHz.
  > 55 dB « 4 GHz (modèles 12 positions).
  > 60 dB « 4 GHz (modèles 6 positions).

MODÈLES ÉLECTRIQUES
- Alimentation : 24 V. c.c. par prise multibroche.
- Circuit de contrôle supplémentaire.

COMMANDE	6 POSITIONS	12 POSITIONS
Manuelle	R. 10050	R. 10070
Électrique	R. 10080	R. 10090

Série BR2 CONNECTEURS BLINDÉS à 2 BROCHES

- Pour câbles blindés bifilaires Ø 4-5-6 mm.
- Accouplement : baïonnette à 2 ergots.
- Polarité assurée mécaniquement.
- Tension d'essai : entre broches, entre broche et masse, } 1500 V. efficace
- Tension de service : 500 V. efficace.

✠ Contact emprisonné

● Hermétique (pression et vide)

Modèle	N°		Ø maxi câble
FICHES DROITES	✠ R. 51010 ✠ R. 51120 ✠ R. 51090		4 5 6
FICHE DROITE à PLATINE	✠ R. 51190		4
FICHES COUDÉES	✠ R. 51150 ✠ R. 51160 ✠ R. 51170		4 5 6
PRISES DROITES	R. 51020 R. 51130 R. 51100		4 5 6
PRISES DROITES à PLATINE	R. 51030 R. 51140 R. 51110		4 5 6
EMBASES à ÉCROU	R. 51000 ● R. 51180		

RELAIS-INVERSEURS COAXIAUX

555412 coelbam.
0 2 giga 60 w 1 giga
3 w 2 giga

Série CP à CAPOT PLASTIQUE

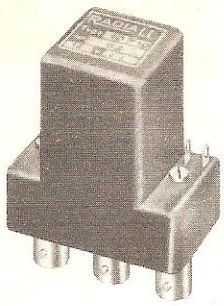

- Relais-inverseur : 1 entrée - 2 sorties.
- Température d'utilisation −25 + 70°C.
- Alimentation : 6 - 12 - 27 - 48 - 120 V. cc. par cosses à souder.
- Fréquence limite : 4 GHz.
- R.O.S. ≤ 1,15 jusqu'à 2 GHz.
- Affaiblissement de réjection : ≥ 40 dB jusqu'à 2 GHz.
- Puissance H.F. transportable : à 200 MHz : 500 W (N) - 80 W (BNC).
- Consommation : 1,8 watt environ.

	Modèles N 50 Ω	Modèles N 75 Ω	Modèles BNC - 50 Ω
Sans contact de masse	R. 10600	R. 10630	R. 10700
Avec contact de masse	R. 10610	R. 10640	R. 10710
Avec charge 50 Ω - 1/4 watt	R. 10620	R. 10410	R. 10720

Série DV à 2 VOIES

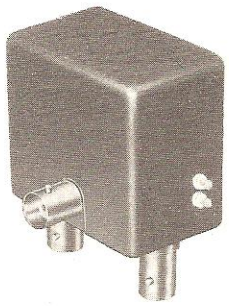

- Homologuée : S.T.T.A.
- Relais inverseur à 2 entrées et 2 sorties effectuant une double inversion simultanée.
- Capot métallique.
- Température d'utilisation : − 40 + 85°C.
- Tension nominale : 6 - 12 - 27 - 48 - 120 V. CC.
- Fréquence limite : 2 GHz.
- Consommation 3 W. environ.
- R.O.S. ≤ 1,15 jusqu'à 1 GHz.
- Affaiblissement de réjection : ≥ 35 dB jusqu'à 1 GHz.
- Puissance H.F. transportable à 200 MHz : 500 w (N) - 80 W (BNC)

Modèle N-50 Ω - R. 100690 alimentation par embase multibroche.

Modèle BNC - 50 Ω R. 10730 alimentation par bornes soudables.

Série CM à CAPOT MÉTALLIQUE

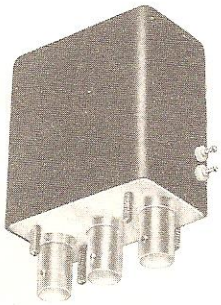

- Homologués : S.T.T.A.
- Mêmes caractéristiques électriques que la série C. P. avec en plus, caractéristiques climatiques et mécaniques améliorées (C.C.T.U. 01.01.A.)
- Température d'utilisation : − 40 + 85°C.
- Impédance caractéristique : 50 ohms.

✱ Alimentation par embase multibroche.

Autres modèles par bornes soudables.

RIGIDITÉ DIÉLECTRIQUE	MODÈLES N 1500 V.	MODÈLES C 1500 V.	MODÈLES HN 1500 V.	MODÈLES HN 2500 V.	MODÈLES BNC 1000 V.
Sans contact de masse	R. 10850 ✱ R. 100850	R. 10950 ✱ R. 100950	R. 10930 ✱ R. 100930	R. 10990 ✱ R. 100990	R. 10750
Avec contact de masse	R. 10860 ✱ R. 100860	R. 10960 ✱ R. 100960	R. 10940 ✱ R. 100940		R. 10760
Avec charge 50 Ω - 1/4 watt	R. 10920 ✱ R. 100920	R. 10970 ✱ R. 100970	R. 10980 ✱ R. 100980		R. 10770

Série MA à COMMANDE MANUELLE

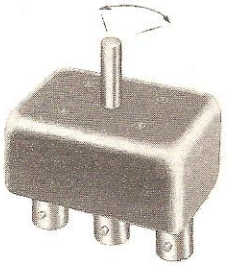

- Mêmes caractéristiques électriques que les C.P. mais dépourvus de bobine.

	MODÈLES N 50 Ω	MODÈLES N 75 Ω	MODÈLES C 50 Ω	MODÈLES HN 50 Ω	MODÈLES BNC 50 Ω
Sans contact de masse	R. 10100	R. 10120	R. 10180	R. 10210 R. 10240 (2500 V.)	R. 10140
Avec contact de masse	R. 10110	R. 10130	R. 10190	R. 10220	R. 10150
Avec charge 50 Ω - 1/4 watt	R. 10170	R. 10260	R. 10200	R. 10230	R. 10160

Doc 1982

COAXIAL RELAYS and SWITCHES DC - 18 GHz

Transfer Relays. SP 3 T to SP 6 T switches. RF Swit

Relais Inverseur homologués S E F T
SPDT Relays *S E F T approved*

N° CODE *Part No.*	Moteur *Actuator*	Signal *Indic.*	Self *Cut-off*	Fig. *Fig.*
R 565 413	monostable *failsafe*			1
R 565 423		X		2
R 565 433	bistable *latching*			1
R 565 443		X		2
R 565 453			X	2
R 565 463		X	X	2

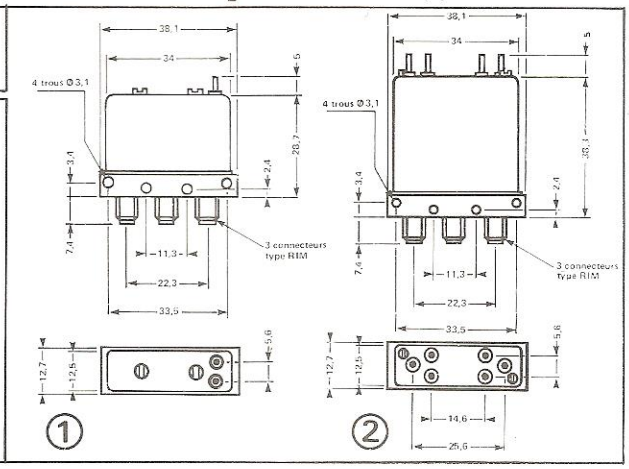

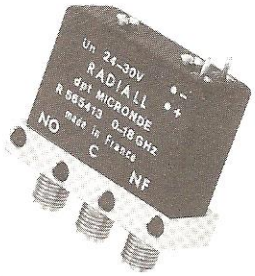

Relais de Transfert
Transfer Relays

N° CODE *Part No.*	Moteur *Actuator*	Signal *Indic.*	Self *Cut-off*	Fig. *Fig.*
R 566 413	monostable *failsafe*			1
R 566 423		X		1
R 566 433	bistable *latching*			1
R 566 443		X		1
R 566 453			X	1
R 566 463		X	X	1
R 566 543	cde man. *manual*	X		2
R 566 563		X	X	2

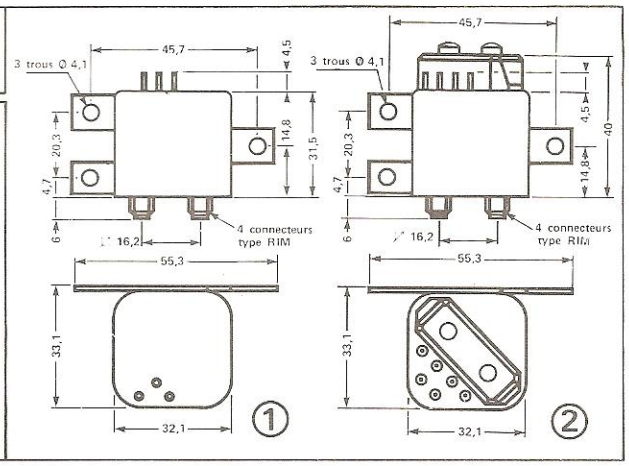

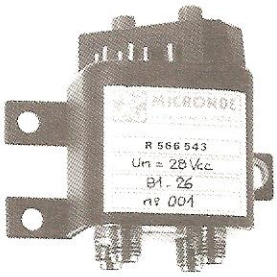

Commutateurs homologués S E F T
SP 3 T to SP 6 T Switches *S E F T approved*

N° CODE *Part No.*	Nb position *n. ports*	Signalisation *Indication*
R 575 113	3	X
R 575 114	4	X
R 575 115	5	X
R 575 116	6	X
R 575 163	3	
R 575 164	4	
R 575 165	5	
R 575 166	6	

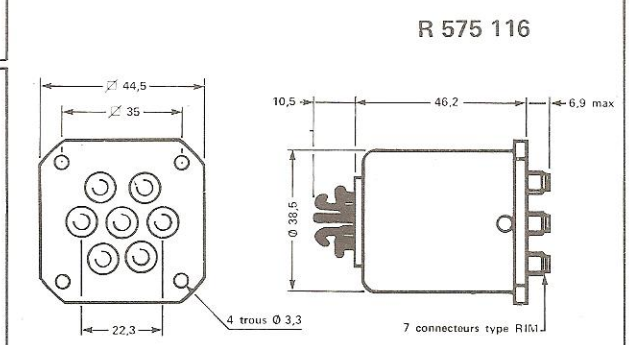

RADIALL
MICRONDE départment

Doc 1982

6T switches.RF Switching 18GHz.SPDT and Tr

R 560713 SUM DC/2 GIGA
5 MAX
mono W

Une gamme complète d'inverseurs, de relais de transfert, de commutateurs répondant aux exigences sans cesse croissantes de l'avionique et des télécommunications civiles et militaires.

A wide range of relays and switches approved, by electronic companies and government.

Caractéristiques Techniques
Specifications

Impédance *Impedance*	50 Ω
Isolation *Crosstalk*	> 70 dB à/*to* 6 GHz > 60 dB à/*to* 18 GHz
Pertes d'insertion *Insertion loss*	< 0,2 dB à/*to* 6 GHz < 0,5 dB à/*to* 18 GHz
R.O.S. *V.S.W.R.*	< 1,25 à/*to* 6 GHz < 1,50 à/*to* 18 GHz
Puissance HF moyenne transportable à 20° C *Input average power at 20° C*	100 W - 0,1 GHz 70 W - 1 GHz 30 W - 10 GHz 20 W - 18 GHz

Endurance *Life*	> 10° cycles/*opérations*
Tension (1) *Voltage*	24 V à/*to* 30 V
Température d'utilisation *Operating temp. range*	– 55° C à/*to* 85° C
Connecteurs HF *RF connectors*	KMR, RIM } f norme NF-C-93563 SMA f norme MIL-C-39012
Vibrations *Vibration*	NF-C-20616 sévérité/*severity* 2000/20
Chocs *Shock*	NF-C-20608 sévérité/*severity* 100 A

(1) Nous pouvons réaliser d'autres tensions d'alimentation 5 V - 12 V et 48 V.
5 - 12 and 48 V upon request

Autres Réalisations

– Relais gamme de température élargie	**R 565 413 480**	– 55°C + 125°C
– Relais TNC de puissance	**R 565 333 350**	100 W à 16,5 GHz
– Commutateur commande BCD	**R 575 116 410**	

Others Products

– *Wide temperature range relay*	*R 565 413 480*	*– 55°C + 125°C*
– *High power TNC relay*	*R 565 333 350*	*100 W to 16.5 GHz*
– *B C D switch driver*	*R 575 116 410*	

Coaxial switches, N-type

8 ic 1983

Medium power model PM 7535

This coaxial switch uses blade type contacts for high switching speed and long operational life. The contact blades are integrated in a coaxial structure to assure perfect match over a large frequency range. The solenoids have separate connections which can be used to arrange for different break-make time diagrams. When the solenoids are shunt-connected the contacts will operate in a break-before-make mode.

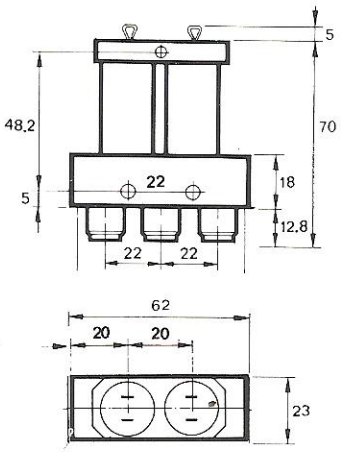

PM 7535

High power model PM 7540

The high power coaxial SPDT PM 7540 has a design with excellent thermal conduction between the centre conductor and housing to enable high power operation. This is achieved by using special thermoconductive materials as dielectric.

The actuator is failsafe and the RF-contact operate in a break-before-make model.

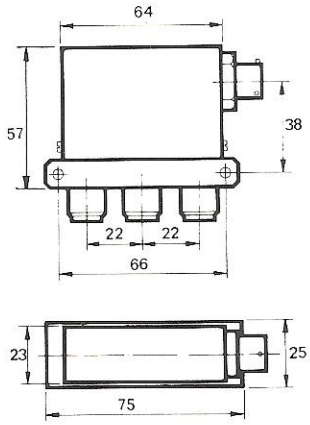

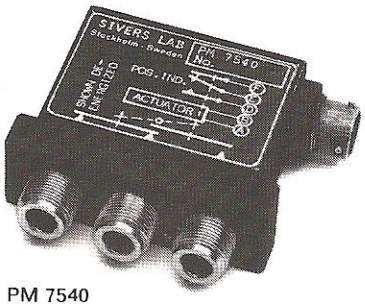

PM 7540

Specification, both models, DC-12.4 GHz

Frequency	DC-1 GHz	1—7 GHz	7—12.4 GHz
VSWR	<1.10	<1.35	<1.50
Insertion loss	<0.2	<0.3	<0.5
Isolation	>70	>65	>60

RF impedance:	50 Ω
Max. RF power: [1]	PM 7535 peak 10 kW,[2] average 50 W at 12.4 GHz PM 7540 peak 10 kW,[2] average 1 kW at 1 GHz 300 W at 10 GHz

See also diagram, page 24.

[1] under steady-state condition, switching RF power will damage the components
[2] at +25°C, 0.1 MPa (sea level).
[3] at +25°C, nominal voltage.

Model	PM 7535	PM 7540
Switch. function	SPDT	SPDT
Actuator	failsafe	failsafe
Switching time	25 ms	100 ms
Pull-in/holding current[3]	200/200 mA	220/220 mA
Position indicator	no	yes
Terminals	solder pins	connector PT07-10-6P cable connector PT07-10-6S can be ordered separately.
Weight	250 g	350 g
Actuator voltage	28 ±3 V DC	28^{+2}_{-8} V DC

Temperature:	—55°C to +85°C ambient
RF connectors:	N-type jack per MIL-3912
Life:	min. 10^6 actuations guaranteed
Material:	RF-connectors stainless steel RF-circuit: aluminium (chromated) beryllium copper, gold plated
Finish:	dull black paint, epoxy
Vibration:	(PM 7540) sine 5— 40 Hz, amplitude 1.5 mm sine 40—2000 Hz, acceleration 10 g (PM 7535) sine 20— 60 Hz, amplitude 0.35 mm sine 60—2000 Hz, acceleration 5 g

Coaxial switches, SMA

General

The light weight coaxial switches of the PM 7550-series are designed for use in wideband mniaturized microwave systems under severe environmental conditions. Advanced stripline technique provides excellent electrical performance up to 18 GHz.

Latching or failsafe

Latching models require no holding current, whereas the **failsafe** models have a small holding current. Switching is break-before-make.

Protection circuit

Means for supply line interference suppression and reversed polarity protection are incorporated in most models.

Environmental

The switches are designed to be used in equipment, that meets MIL-E-5400 and MIL-E-16400. A balanced actuator construction having a small mass ensures that the switches withstand shock/vibrations.

Position indicator

For remote indication of the switch position additional contacts are incorporated, in most models.

Mounting

The switches are provided with mounting holes which also enable easy stacking of several units. This facilitates more complicated switching configurations (matrixing).
Min. distance between adjacent switches is 5 mm latching models, 10 mm for failsafe models.

Specification DC-18 GHz, all models

Frequency	DC—1 GHz	1—4 GHz	4—12 GHz	12—18 GHz
VSWR	<1.10	<1.20	<1.35	<1.50
Insertion loss	<0.1 dB	<0.2 dB	<0.3 dB	<0.5 dB
Isolation[3])	>80 dB	>70 dB	>65 dB	>60 dB

RF impedance:	50 Ω
Max. RF power:	peak 1 kW, average 15 W
Actuator voltage:	28 ±5 V DC
Duty cycle:	PM 7550-53 50 ms —55°C — +40°C linearly increasing to 200 ms at +85°C (min. time between succesive operations) PM 7555-57 100%.
Temperature:	—55°C to +85°C ambient
RF connectors:	SMA jack
Life:	min. 10^6 actuations guaranteed
Vibration:	Sine ±1.5 mm, 5—60 Hz Sine 20 g, 60—2000 Hz
Material:	RF-circuit: aluminium (chromated) and solid gold alloy contacts RF-connectors: stainless steel, beryllium-copper terminals: solder pins
Finish:	dull black paint

Reliability—100% testing

All switches pass an extensive screening procedure, where all circuit parameters are checked across the frequency range, and continuous operation (running-in more than 5,000 actuations) is being checked during temperature cycling. This enables the detection of early and intermittent failures.

Model	PM 7550	PM 7551	PM 7552	PM 7553	PM 7555	PM 7555/01	PM 7557	PM 7557/01	PM 7560	PM 7561
Switch function	SPDT	Transfer	SPDT	Transfer	SPDT	SPDT	SPDT	SPDT	SPDT	Transfer
Actuator	latching	latching	failsafe	failsafe	latching	latching	failsafe	failsafe	manual	manual
Switching time	15 ms	15 ms	15 ms	15 ms	20 ms	20 ms	20 ms	20 ms	n/a	n/a
Pull-in/holding current at 25°C max.	350/-mA	350/-mA	440/40 mA	400/40 mA	60/mA	60/mA	60/60 mA	60/60 mA	n/a	n/a
Position indicator	yes	yes	yes	yes	no	yes	no	yes	no	no
Self cut-off	yes	yes	n/a	n/a	yes	no[1]	n/a	n/a	n/a	n/a
Weight[2] max.	65 g	85 g	65 g	85 g	55 g	55 g	55 g	55 g	35 g	60 g

[1]) Pulse operated, pulse width 20—30 ms.
[2]) 1 oz equals 28.35 g.
[3]) Up to 90 dB available on option.

Coaxial switches, SMA

Outline drawing

PM 7550
PM 7552

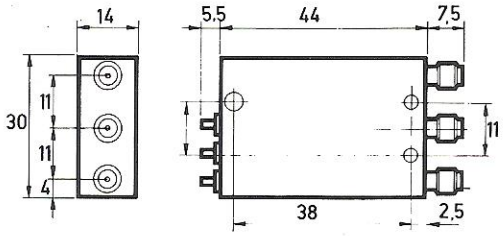

PM 7551
PM 7553

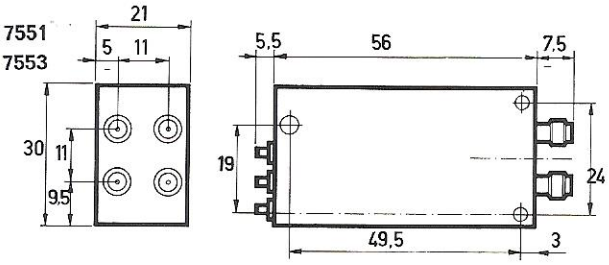

PM 7555
PM 7557

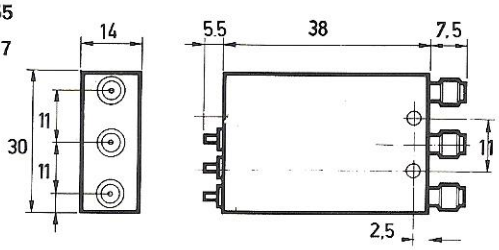

PM 7560

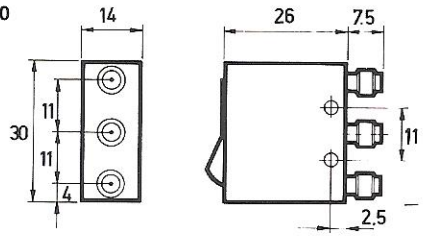

PM 7561

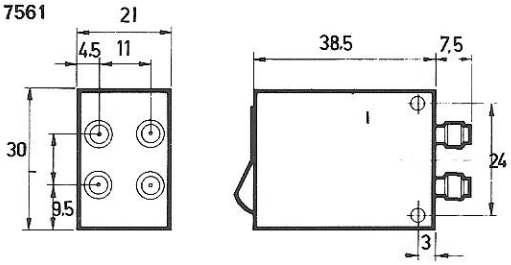

Actuators

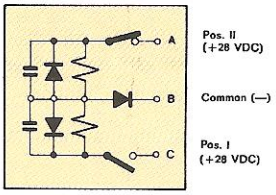

PM 7550 PM 7551

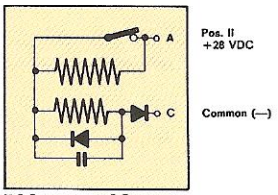

PM 7552 PM 7553

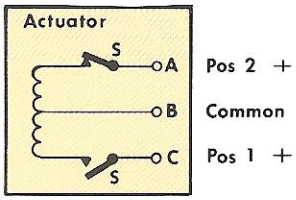

PM 7555

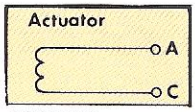

PM 7557
PM 7557/01

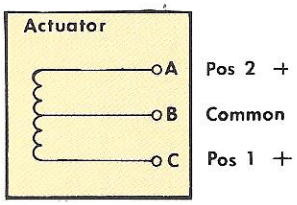

PM 7555/1

RF circuits

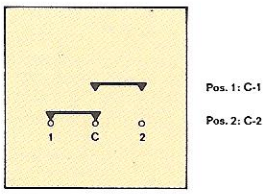

PM 7550 PM 7552
PM 7555 PM 7557
PM 7560

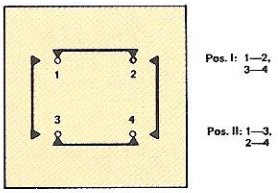

PM 7551 PM 7553
PM 7561

Position indicators

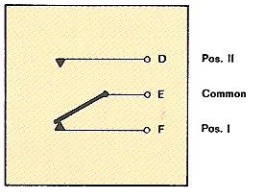

PM 7550 PM 7551
PM 7552 PM 7553
PM 7555/01
PM 7557/01

10-6S
tely.

Power handling

8u 1983

Average power capacity

Max. RF-power at +85°C,
load VSWR = 1:1

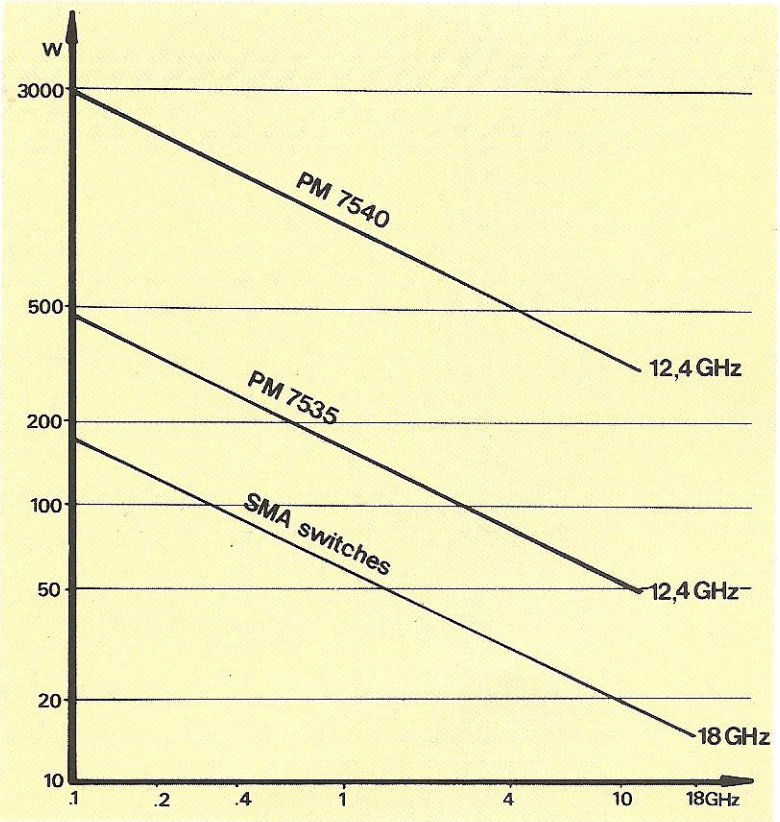

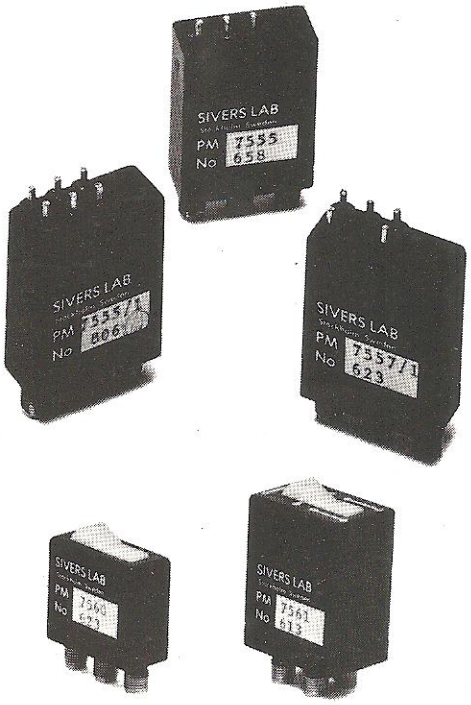

Sales and service

How to order

Your local Philips sales office or Sivers Lab representative is the contact for both sales and service assistance for all products listed in this catalog. These offices have special communication channels to Sivers Lab plant at Stockholm and thus provide the most efficient way to satisfy your needs. They also have the latest price and delivery information on all products, and can provide service information and application engineering data.

Algerie: Bureau de Liaison Philips, 13, Rue Med-El-Mansour Benkara (Ex Rue Ferrando) El Biar, Alger.

Antillen: Philips Antillana N.V., P.O.B. 523, Willemstad; tel. Curaçao 37575-35464.

Argentina: Philips Argentina S.A. Casilla Correo 3479, 1000 Buenos Aires; tel. T.E. 70, 77 41 al 77 49.

Australia: Philips Scientific & Industrial Equipment Div., Centrecourt 25—27 Paul Street, North Ryde Sydney, N.S.W. 2113; tel. 8888 222.

Belgie/Belgique: M.B.L.E., 80 Rue des Deux Gares, 1070 Bruxelles; tel. 230000.

Bolivia: Industrias Bolivianas Philips S.A., Cajón Postal 2964, La Paz, Bolivia; tel. 50029.

Brasil: Philips Do Brasil Ltda, Sistemas Prof S&I, Dept Coml de Instrumentos de Teste et Medicao, Rua Amador Bueno 474, CEP 04752 — Sao Paulo-SP.

Canada: Philips Test & Measuring Instruments Inc., 6 Leswyn Road, Toronto (Ontario) M6A 1K2; tel. 789-7188.

Chile: Philips Chilena S.A. Professional Div. S&I Casilla Postal 2687, Av. Santa Maria 0760 Santiago; tel. 394001.

Colombia: Industrias Philips de Colombia S.A., Communications Department Apartado Nacional 1505, Bogota; tel. 473640.

Costa Rica: Philips de Costa Rica Ltd., Apartado Postal 4325, San Jose; tel. 21 01 11.

Danmark: Philips A/S, Graham Bells vej 7, P.O. Box 1129, 8200 Århus N; tel. Århus 23 14 11.

Deutschland: Transtech GmbH Frankfurter Str. 22, 7100 Heilbronn; tel. 07131-68034.

Ecuador: Philips Ecuador S.A. Casilla 343, Quito; tel. 239080.

El Salvador: Philips de El Salvador, Apartado Postal 865, San Salvador; tel. 7441.

España: Philips Ibèrica S.A.E., Grupo Instrumentación, Apartado 2065, Martinez Villergas 2, Madrid 27.

Ethiopia: Philips Ethiopia (Priv. Ltd. Co), P.O.B. 2565, Addis Abeba; tel. 48300.

France: Philips Industrie, S.A. 105 Rue de Paris, 93 002 Bobigny; tel. 830.11.11.

Great Britain: Anglia Microwaves Ltd. 25, High Street, Brent Chase House Brentwood, Essex, tel. 0277-22 18 56.

Guatemala: Philips de Guatemala S.A. Apartado Postal 238, Guatemala City; tel. 64857.

Hellas: Philips S.A. Hellénique, P.O. Box 153, 52-54 Ave Syngrou Athenes; tel. 230476.

Hong Kong: Philips Hong Kong Ltd, Hopewell Centre, 27-29th floor, P.O.B. 2108, Hong Kong; tel. H-249246.

India: Peico Electronics & Electricals Ltd., Shivsagar Estate Block "A", Dr. Annie Besant Road, P.O.B. 6598, Bombay 400 018; tel. 391431/89 76 70.

Indonesia: P.T Philips Development Corporation, P.O.B. 2287, Jakarta; tel. 51985.

Iran: Philips Iran Ltd., P.O.B. 1297 Teheran; tel. 372081-5 (5 lines).

Iraq: Philips (Iraq) W.L.L. Munir Abbas building, 4th floor, South Gate, Box 5749, Bagdad; tel. 80409.

Ireland: Philips Electrical Ltd., Newstead Clonskeagh, Dublin 14; tel. 693335.

Island: Heimilistaeki SF, Saetun 8, Reykjavik; tel. 24000.

Italia: Philips S.p.A., Sezione S&I, V. le Elvezia 2, 20052 Monza; tel. (039) 393-6351.

Japan: Shoshin Shoji Kaisha Ltd.
Tokyo: P.O. Box Nihonbashi 173, phone: (03) 270-5921.
Osaka: C.P.O. Box 541, phone: (06) 231-5051.

Kenya: Philips (Kenya) Ltd., P.O.B. 30554, Nairobi; tel. 29981.

Korea: Philips Electronics (Korea) Ltd., C.P.O. Box 3680, Philips House, 260-199 Itaewon-Dong, Yongsan-Ku, Seoul; tel. 794-5011/5 (5 lines).

Malaysia: Philips Malaysia Sdn. Bhd. Lot 2, Jalan 222, Section 14, Petaling Jaya, P.O. Box 2163, Kuala Lumpur, Selangor.

Mexico: Philips Mexicana S.A. de C.V. Division Cientifico Industrial, Durango 167, Mexico 7 D.F.

Nederland: Philips Nederland B.V. Boschdijk, 525 Gebouw VB, 4 Eindhoven; tel. 793333.

New Zealand: Philips Electrical Ind. Ltd., Professional & Industrial Div. Wakefieldstreet 181—195, P.O. Box 2097 Wellington C1.

Nigeria: Philips (Nigeria) Ltd., Philips House, 6 Ijora Causeway, P.O.B. 1921, Lagos; tel. 45414/7.

Norge: Odd Tvedt & Co. A/S, Damgårdsvej 35, Postboks 3020, 5030 Landås, Bergen; tel. 29 83 30.

Pakistan: Philips Electrical Co. of Pakistan Ltd., El-Markaz, M.A. Jinnah Road, P.O.B. 7101, Karachi 3; tel. 70071.

Paraguay: Philips del Paraguay S.A., Casilla de Correo 605, Asuncion; tel. 8045-5536-6666.

Peru: Philips Peruana S.A., S & I Dept. Av. Alfonso Ugarte 1268, P.O.B. 1841, LIMA 5.

Philippines: Philips Industrial Dev. Inc., P.O.B. 911, Makati Commercial Center, Makati, Rizal D-708; tel. 88 94 53 to 88 94 56.

Portugal: Philips Portuguesa S.A.R.L. Av. Eng. Duarte Pacheco 6, Lisboa-1; tel. 683121.

Schweiz-Suisse-Svizzera: Philips A.G., Allmend Str. 140, Postfach. 8027 Zürich; tel. 01-43 23 92.

Singapore: Philips Project Development Singapore PTE Ltd., P.O. Box 340, Lorong 1 Toa Payoh Central Post Office, Singapore 12.

South Africa: South African Philips (Pty) Ltd., P.O.B. 7703, 2 Herb Street, New Doornfontein Johannesburg; tel. 011-6140411.

Suomi: Oy Philips Ab, P.O. Box 255, 00101 Helsinki 10; tel. 09358-017271.

Sverige: SIVERS LAB, Box 42018, Elektravägen 49, 126 12 Stockholm; tel. (08)-18 03 50.

Taiwan: Yung Kang Trading Co Ltd., San Min Building, 1st Floor 57-1 Chung Shan N Road, 2 Section, P.O.B. 1467, Taipei; tel. 5717281.

Tanzania: Philips (Tanzania) Ltd. P.O.B. 20104, Dar es Salaam; tel. 29571.

Thailand: Philips Thailand Ltd., 283, Silom Road, P.O. Box 961, Bangkok; tel. 36980, 36984-9.

Tunisia: S.T.I.E.T., 32815, Rue Ben Ghedhahem, Tunis; tel. 244268.

Türkiye: Türk Philips Ticaret A.S. Posta Kutusu 504 Beyoglu, Istanbul; tel. 43 59 10.

Uruguay: Industrias Philips del Uruguay, Avda Uruguay 1287, Montevideo; tel. 956 41-2-3-4.

USA (west coast): Cleland & Co, Box 90339, Los Angeles, Ca 90009; tel. 213-821-0213.

Venezuela: Industrias Venezolanas Philips, P.O. Box 1167, Caracas, Venezuela; tel. 360511.

Rep. du Zaire: Philips S.Z.R.L. B.P. 1798, Kinshasa.

Zambia: Philips Electrical Zambia Ltd., Science & Industry Div., P.O.B. 20553, Kitwe; tel. 2526/7/8.

Österreich: Österreichische Philips Ind. GmbH, Parttartgasse 32, A-1230 Wien; tel. 831501.

For countries not listed:
SIVERS LAB, Box 42018, S-126 12 Stockholm, Sweden.