OCXO AND CLOCK DISTRIBUTION SYSTEM

As used with VE2ZAZ Controller

Jacques Audet VE2AZX
June 2011
Rev. Jan 2013

BLOCK DIAGRAM

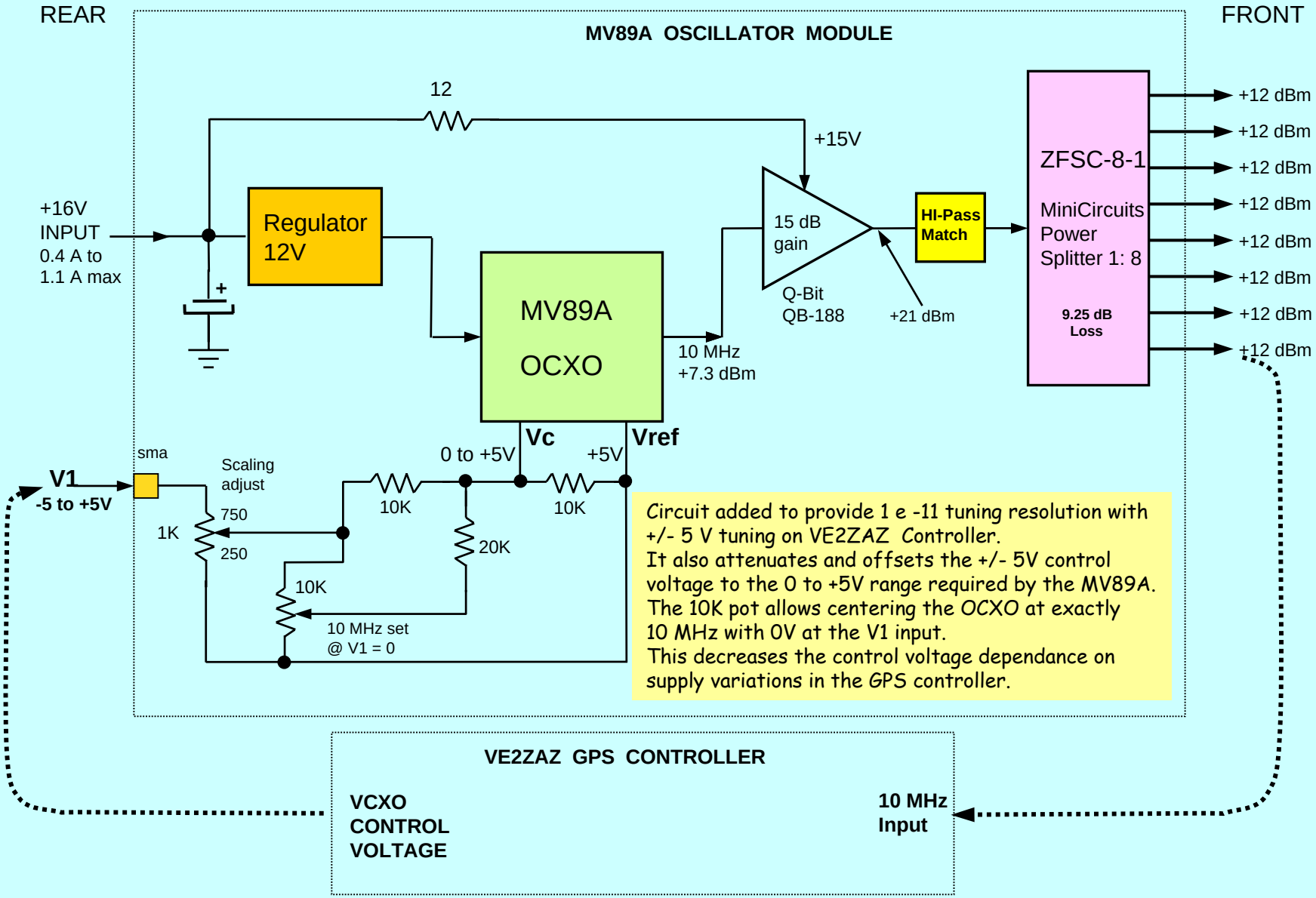

MV89A MEASUREMENTS

Vc	Freq * 200	Freq (Hz) ref. @ 10 MHz	OCXO alone SLOPE Hz / V	mV into 1K		Zin at Vc in
0	-1769.3	-3.8465	**1.471**	42.70	Vc to GND	57173
2.484	-1021.2	-0.106				
5.02	-292.4	3.538		43.40	Vc to +5V ref	57433
				OCXO Average Zin		**57303**

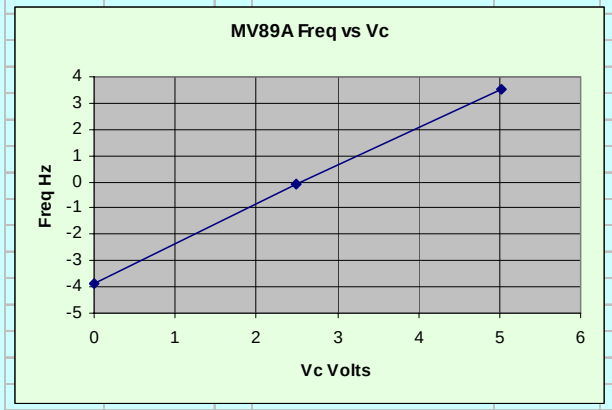

Circuit added to provide 1 e -11 tuning resolution with +/- 5 V tuning on VE2ZAZ Controller

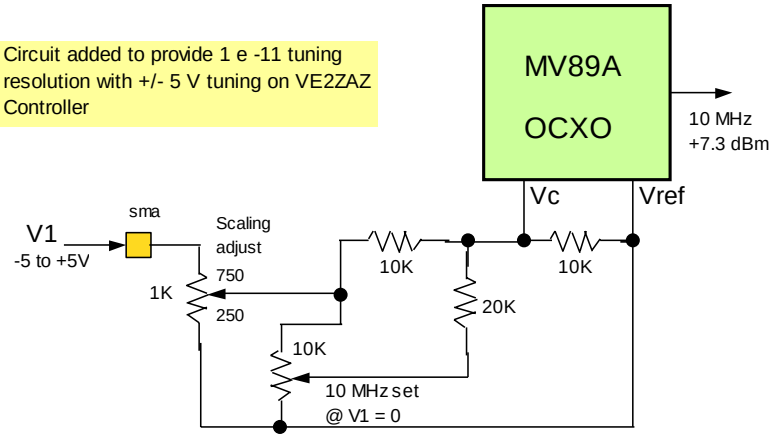

With V1 = 0 The 10K pot gives:
Vc min / max = 2.115 / 3.021 V
Delta V = 0.906V or 1.333 Hz frequency adustment range.

With 10K pot at middle and with V1 min / max = -4.5 / +4.5 V, we get:
Vc min / max = 2.054 / 3.074 V
Delta V = 1.02 V or 1.5 Hz frequency adustment range.
VE2ZAZ's controller has 14 bits resolution or 16384 levels. Then the corresponding freq resolution = 1.5 Hz / 16384 = 91.5 uHz.
At 10 MHz, this is 9.15 e -12 resolution, or approx. 1e-11 resolution.

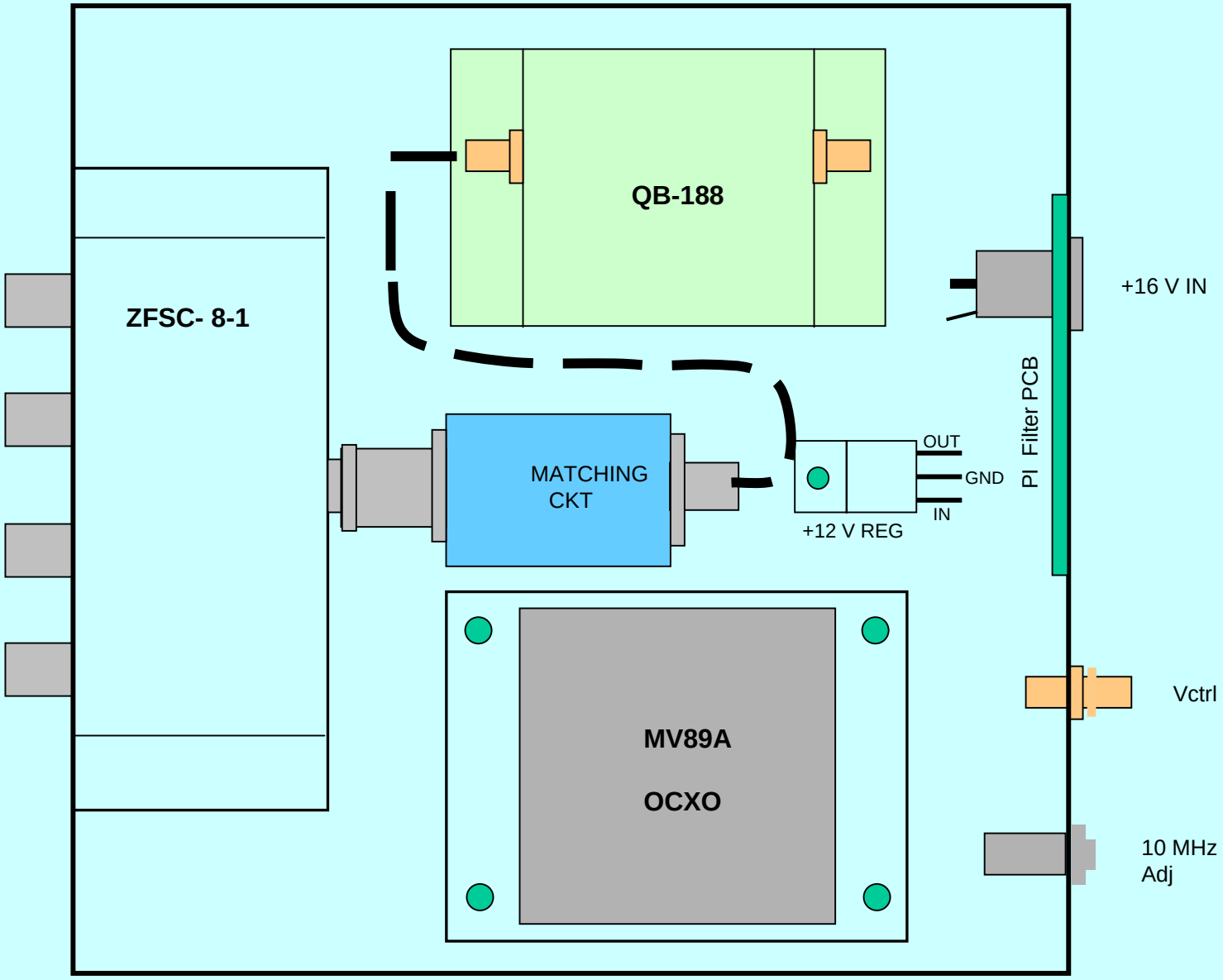

Cabinet: Hammond 1455T1601

X 2.529

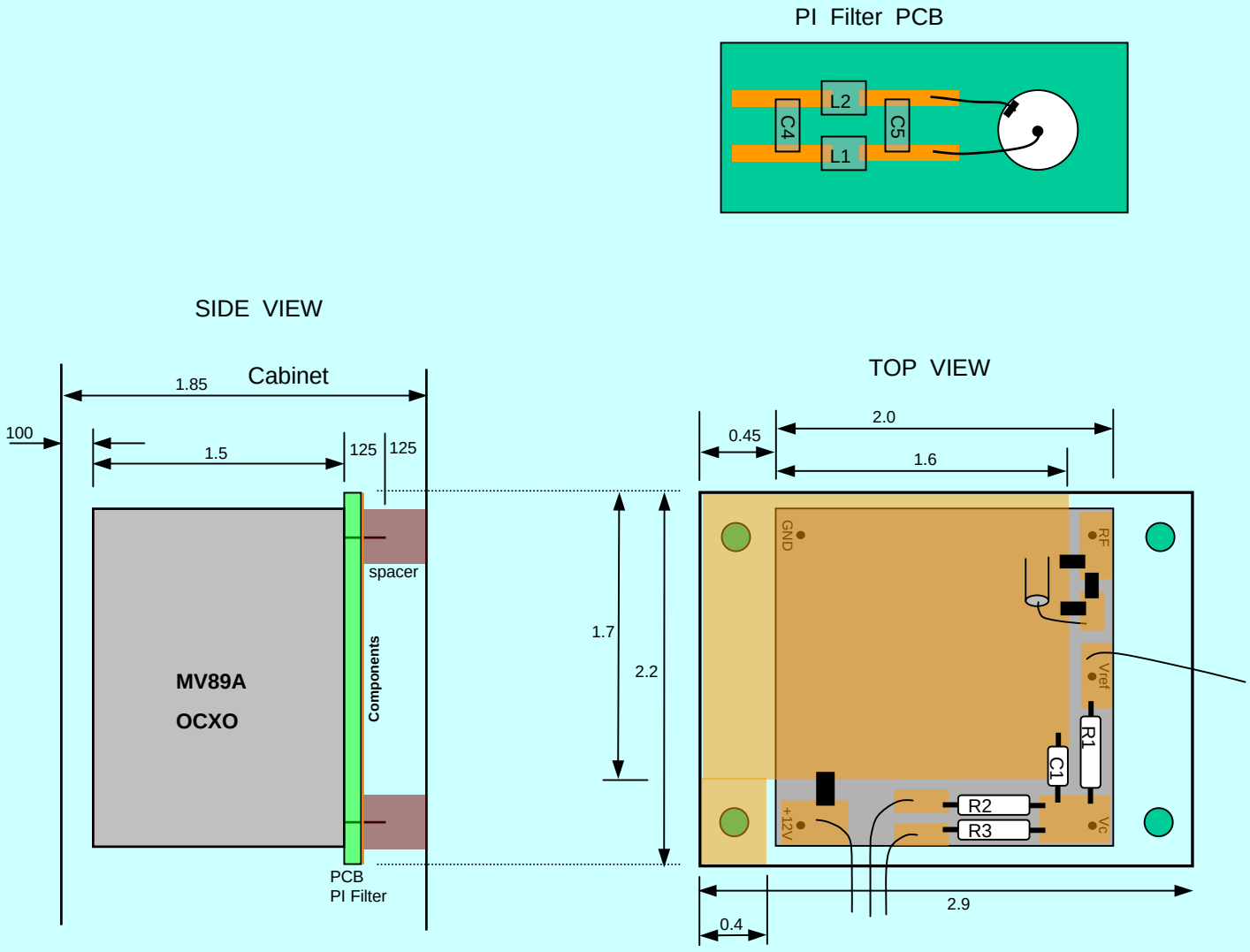
PI Filter PCB
L2
C4
C5
L1
SIDE VIEW
Cabinet
1.85
100
1.5
125
125
spacer
MV89A
OCXO
Components
PCB
PI Filter
1.7
2.2
TOP VIEW
0.45
2.0
1.6
GND
RF
Vref
R1
C1
R2
R3
+12V
Vc
2.9
0.4

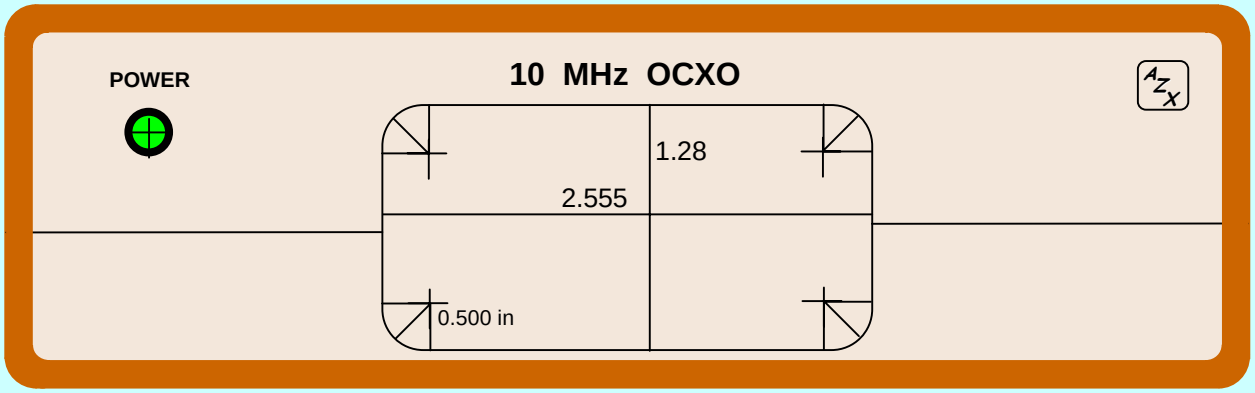
POWER
10 MHz OCXO
1.28
2.555
0.500 in

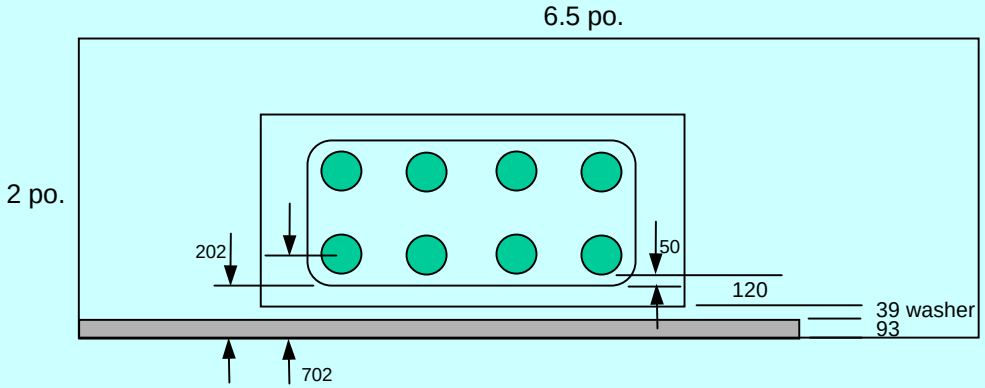
6.5 po.
2 po.
202
50
120
39 washer
93
702

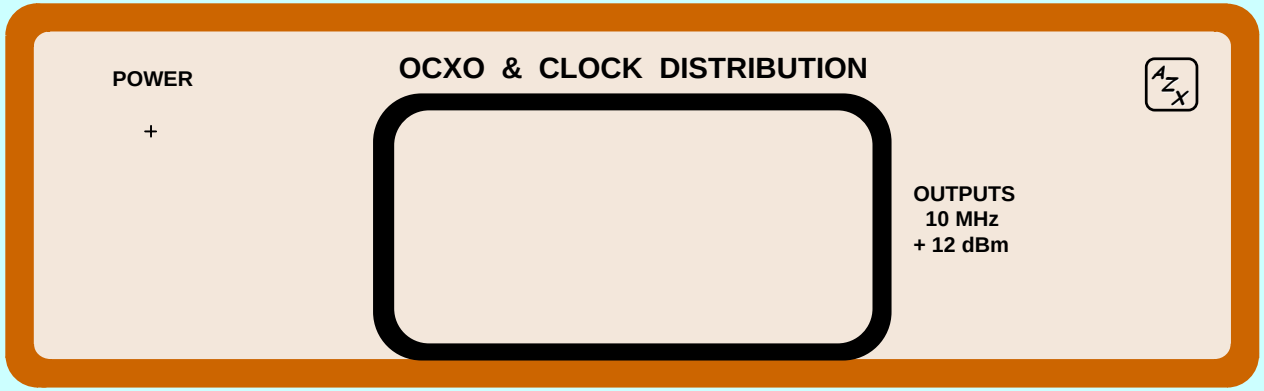
POWER
+
OCXO & CLOCK DISTRIBUTION
OUTPUTS
10 MHz
+ 12 dBm

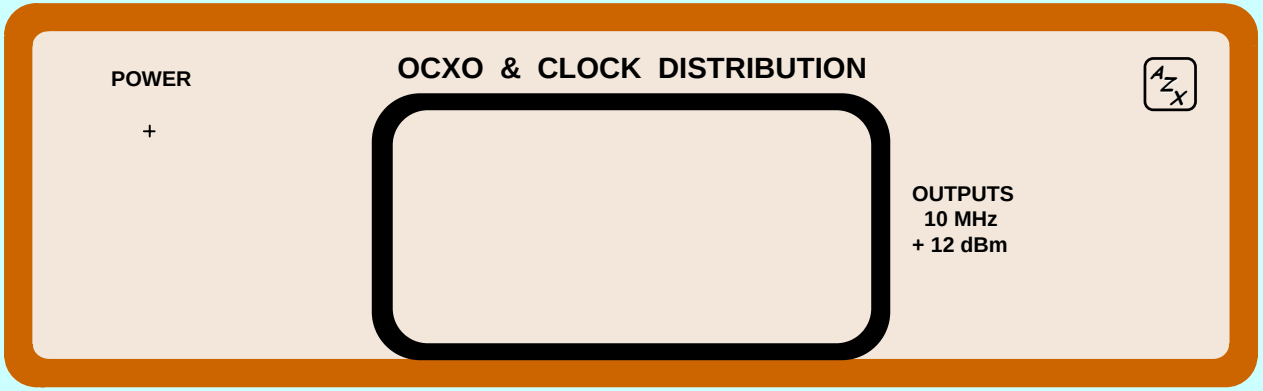
POWER
+
OCXO & CLOCK DISTRIBUTION
OUTPUTS
10 MHz
+ 12 dBm

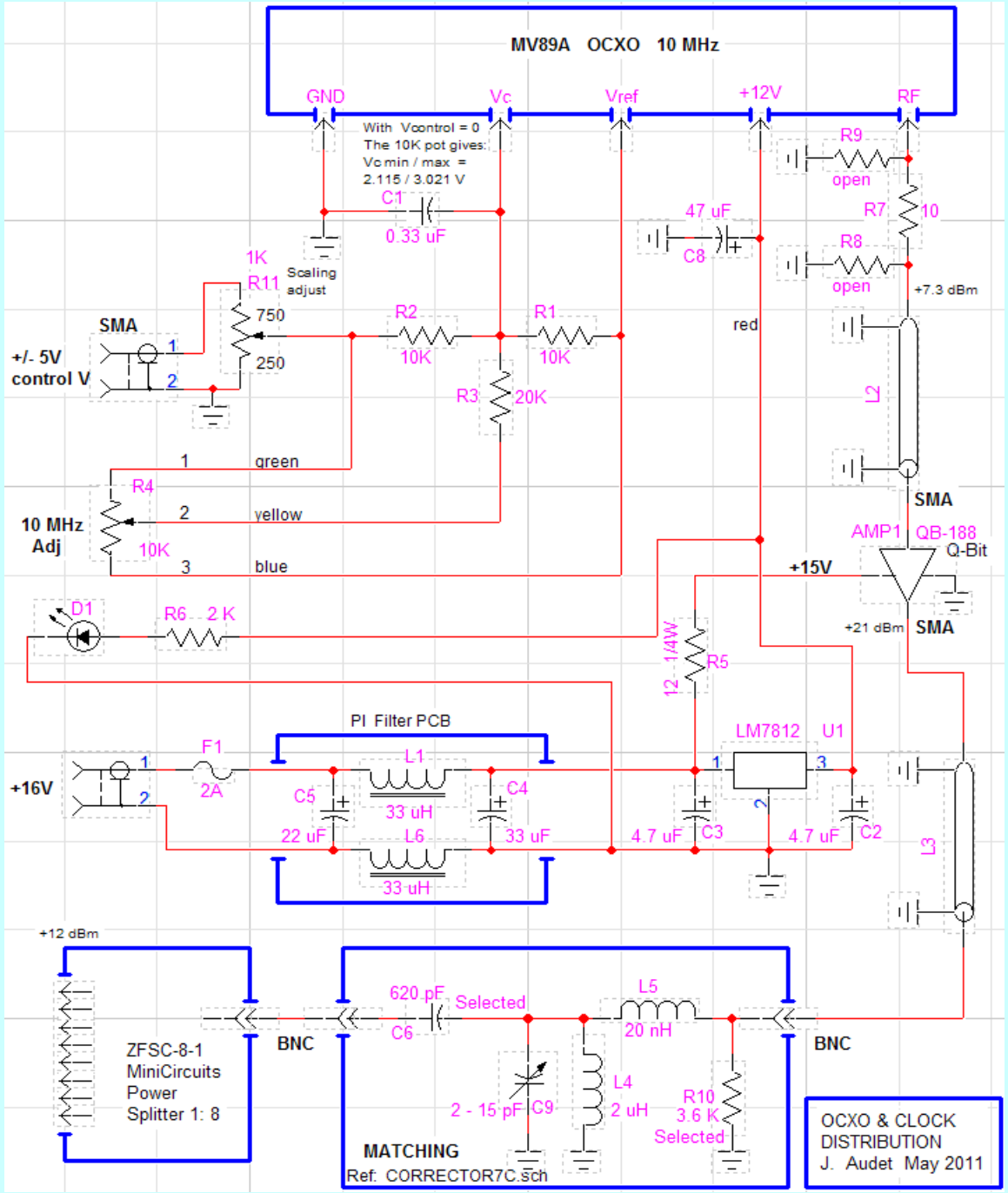
MV89A OCXO 10 MHz
GND
Vc
Vref
+12V
RF
With Vcontrol = 0
The 10K pot gives:
Vc min / max =
2.115 / 3.021 V
C1
0.33 uF
R9
open
R7
10
47 uF
C8
R8
open
+7.3 dBm
1K
R11
Scaling
adjust
750
250
SMA
+/- 5V
control V
R2
10K
R1
10K
R3
20K
red
L2
SMA
1
green
R4
2
yellow
10 MHz
Adj
10K
3
blue
AMP1
QB-188
Q-Bit
+15V
+21 dBm
SMA
D1
R6
2 K
12
1/4W
R5
PI Filter PCB
LM7812
U1
F1
2A
+16V
L1
33 uH
C5
22 uF
C4
33 uF
L6
33 uH
4.7 uF
C3
4.7 uF
C2
L3
+12 dBm
ZFSC-8-1
MiniCircuits
Power
Splitter 1: 8
BNC
620 pF
C6
Selected
L5
20 nH
2 - 15 pF
C9
L4
2 uH
R10
3.6 K
Selected
BNC
MATCHING
Ref: CORRECTOR7C.sch
OCXO & CLOCK
DISTRIBUTION
J. Audet May 2011

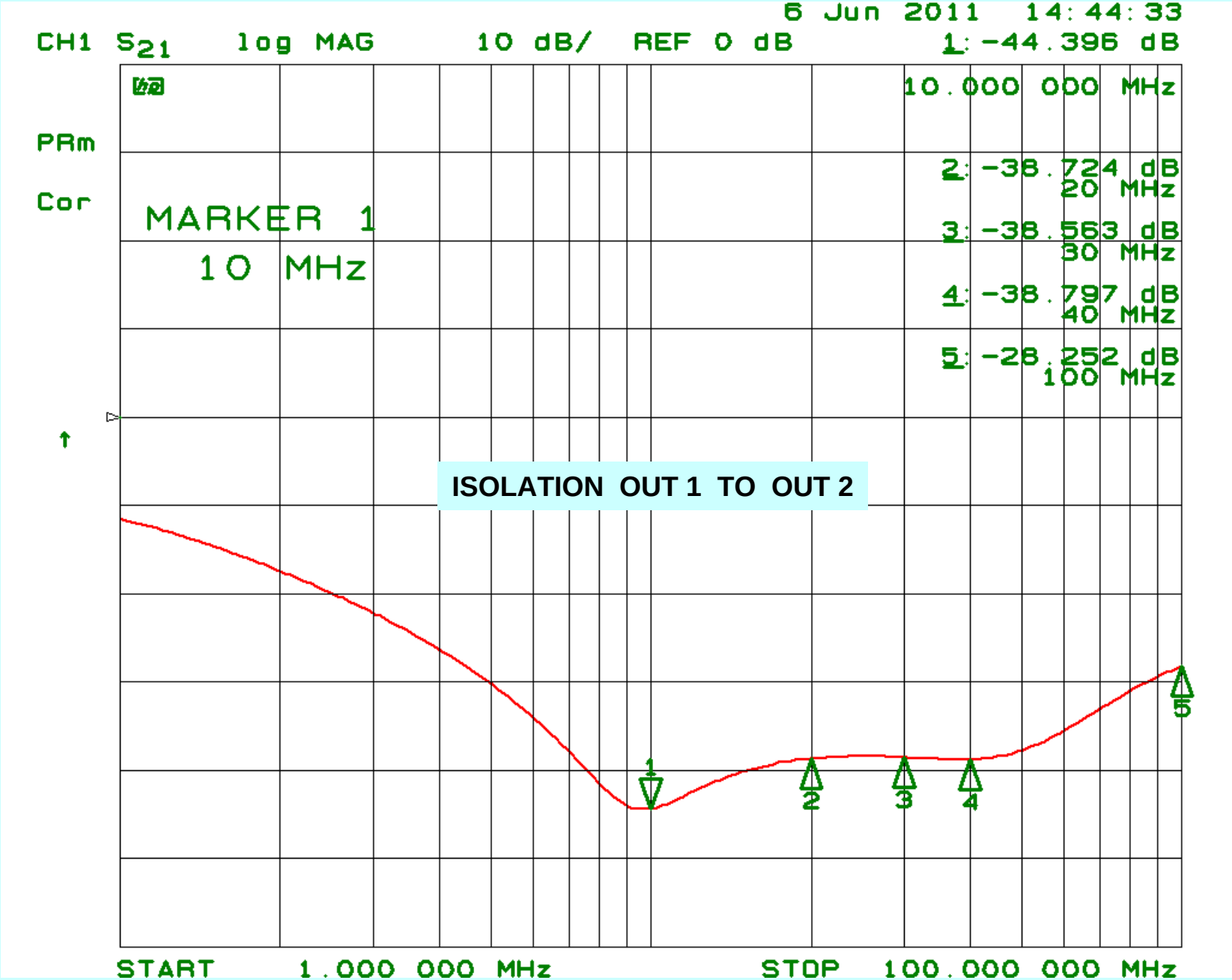
6 Jun 2011 14:44:33
CH1 S21 log MAG 10 dB/ REF 0 dB
1: -44.396 dB
10.000 000 MHz
PRm
Cor
2: -38.724 dB
20 MHz
MARKER 1
10 MHz
3: -38.563 dB
30 MHz
4: -38.797 dB
40 MHz
5: -28.252 dB
100 MHz
ISOLATION OUT 1 TO OUT 2
START 1.000 000 MHz
STOP 100.000 000 MHz

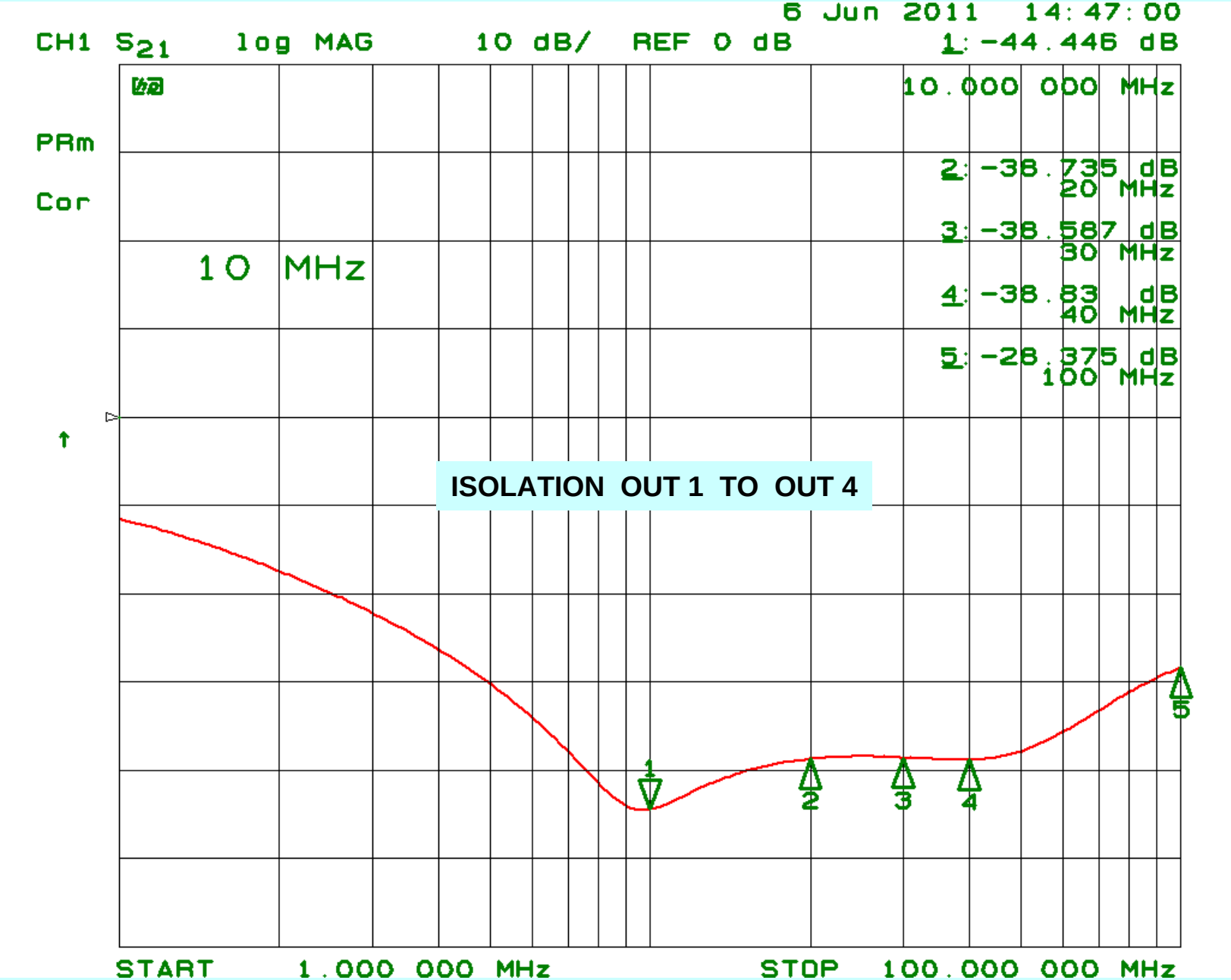
6 Jun 2011 14:47:00
CH1 S21 log MAG 10 dB/ REF 0 dB
1: -44.446 dB
10.000 000 MHz
PRm
Cor
2: -38.735 dB
20 MHz
3: -38.587 dB
30 MHz
10 MHz
4: -38.83 dB
40 MHz
5: -28.375 dB
100 MHz
ISOLATION OUT 1 TO OUT 4
START 1.000 000 MHz
STOP 100.000 000 MHz

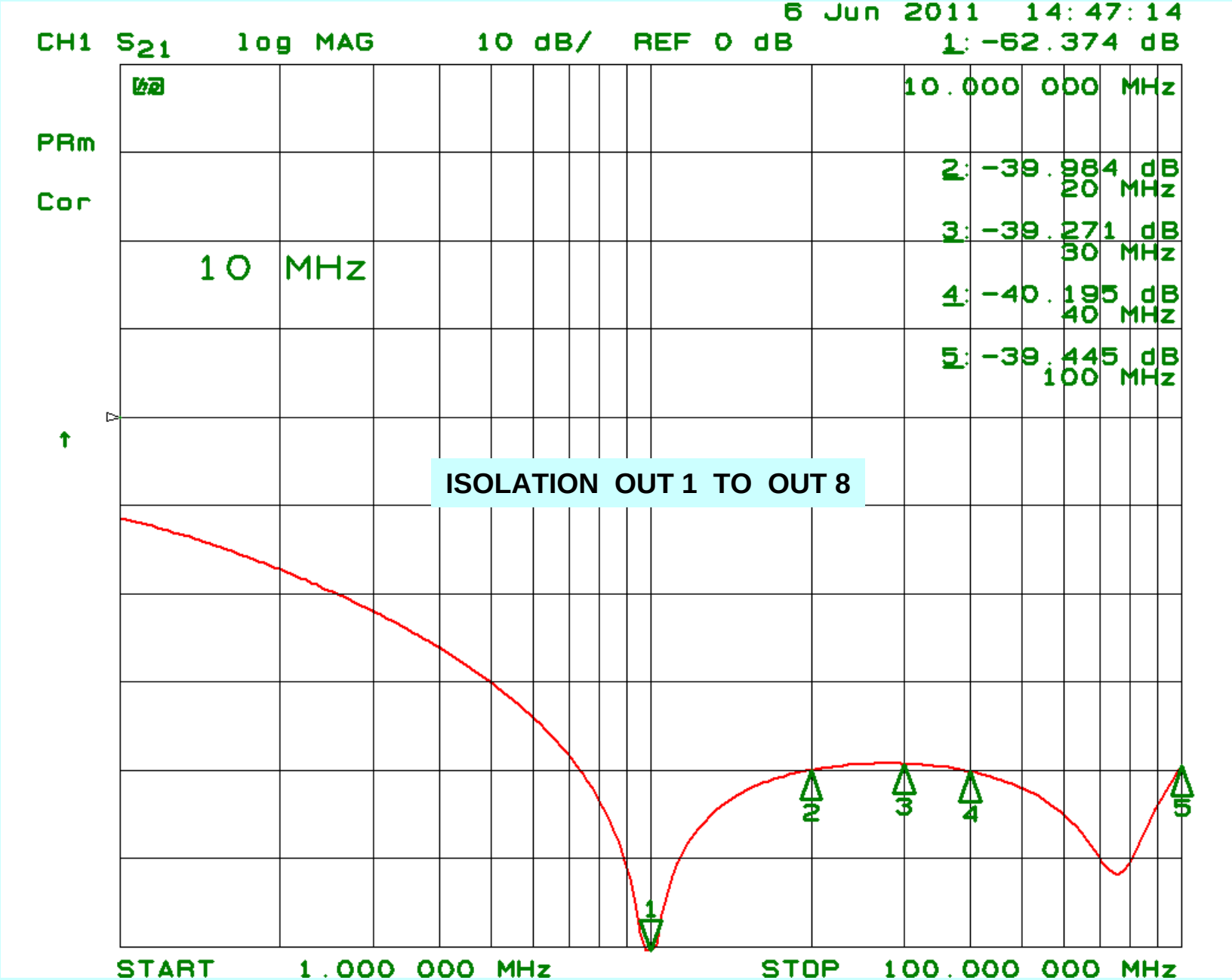
6 Jun 2011 14:47:14
CH1 S21 log MAG 10 dB/ REF 0 dB
1: -62.374 dB
10.000 000 MHz
PRm
Cor
2: -39.984 dB
20 MHz
3: -39.271 dB
30 MHz
10 MHz
4: -40.195 dB
40 MHz
5: -39.445 dB
100 MHz
ISOLATION OUT 1 TO OUT 8
1
2
3
4
5
START 1.000 000 MHz
STOP 100.000 000 MHz

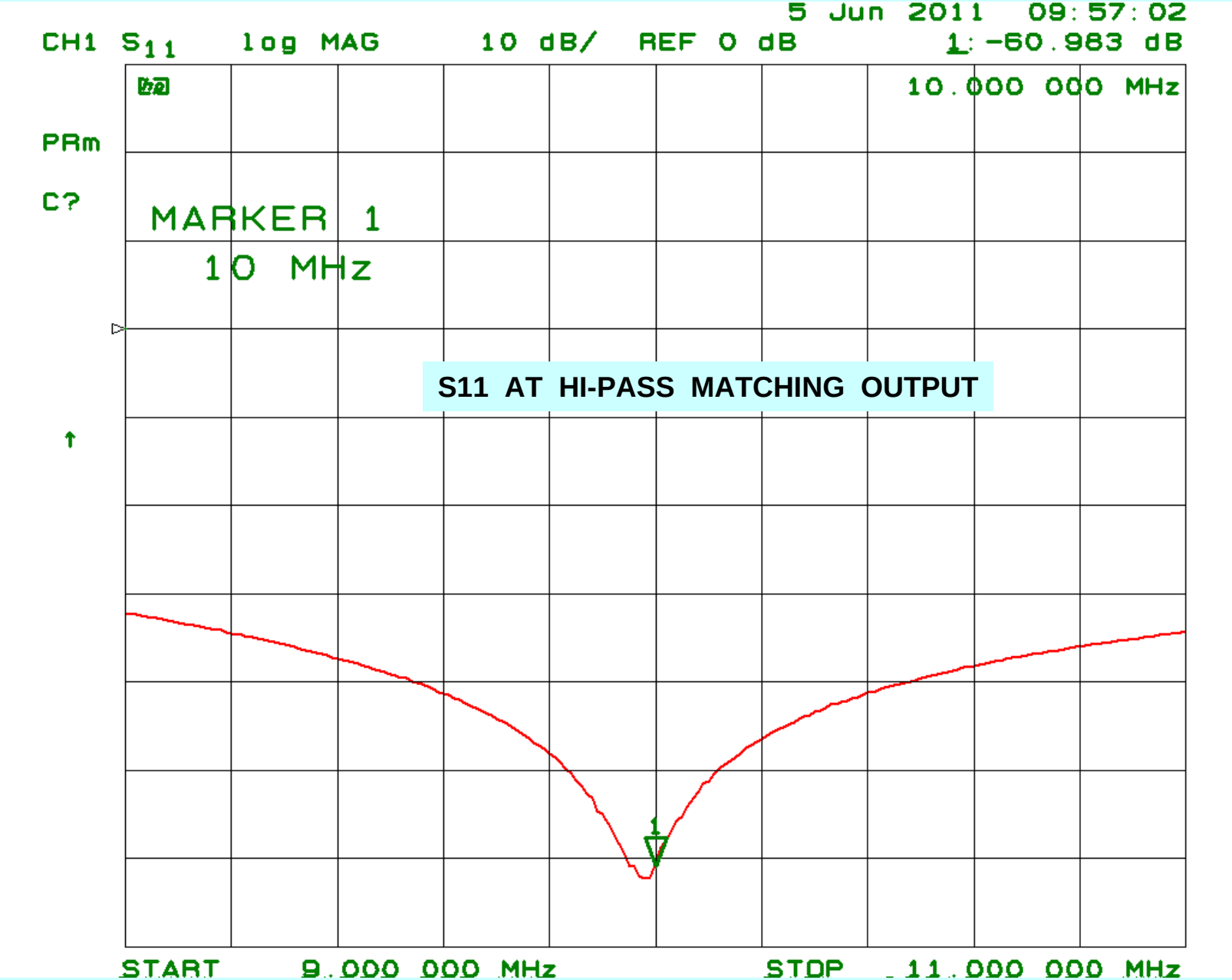
5 Jun 2011 09:57:02
CH1 S11 log MAG 10 dB/ REF 0 dB 1: -60.983 dB
10.000 000 MHz
PRm
C?
MARKER 1
10 MHz
S11 AT HI-PASS MATCHING OUTPUT
START 9.000 000 MHz
STOP 11.000 000 MHz

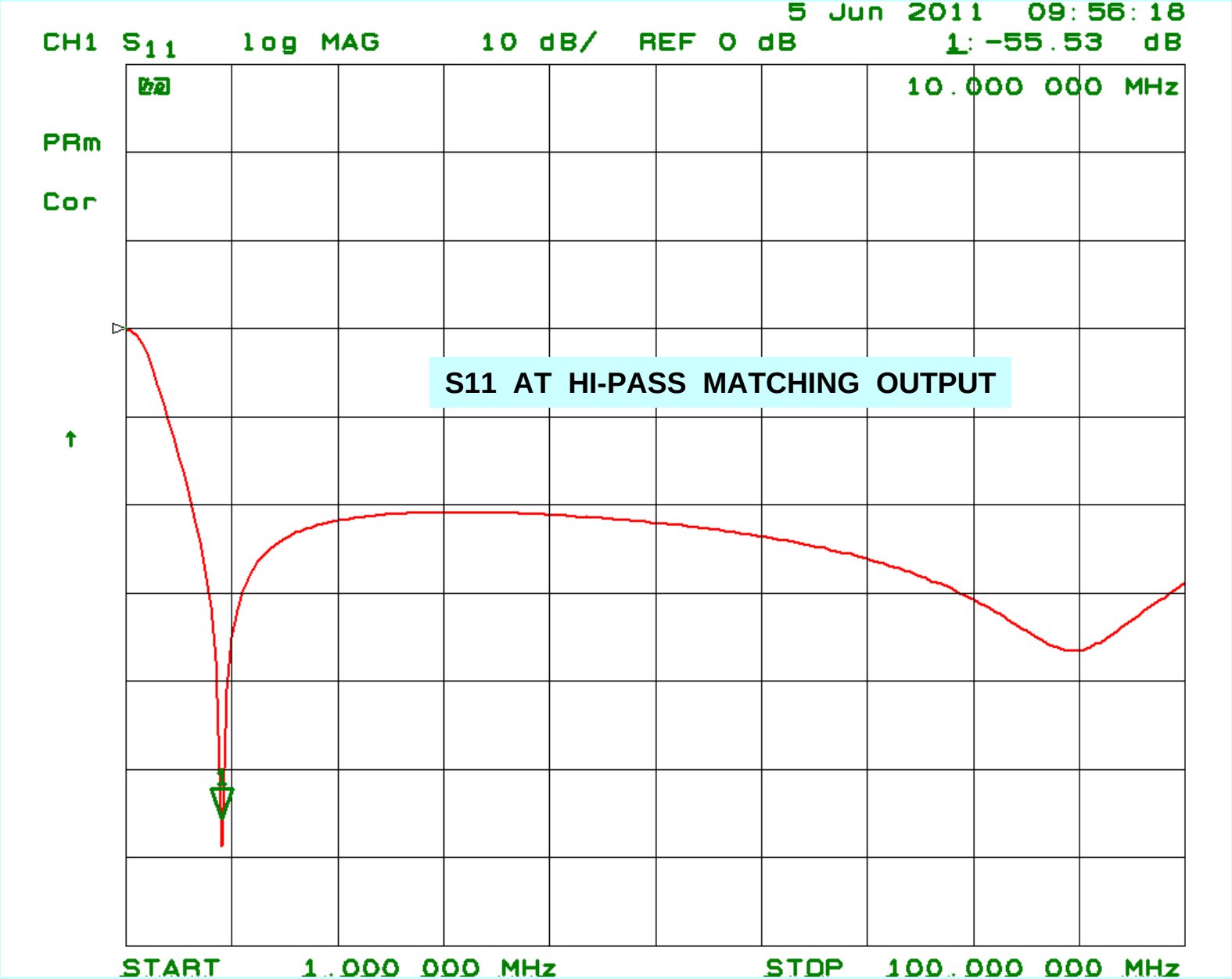
5 Jun 2011 09:56:18
CH1 S11 log MAG 10 dB/ REF 0 dB 1: -55.53 dB
10.000 000 MHz
PRm
Cor
S11 AT HI-PASS MATCHING OUTPUT
START 1.000 000 MHz
STOP 100.000 000 MHz

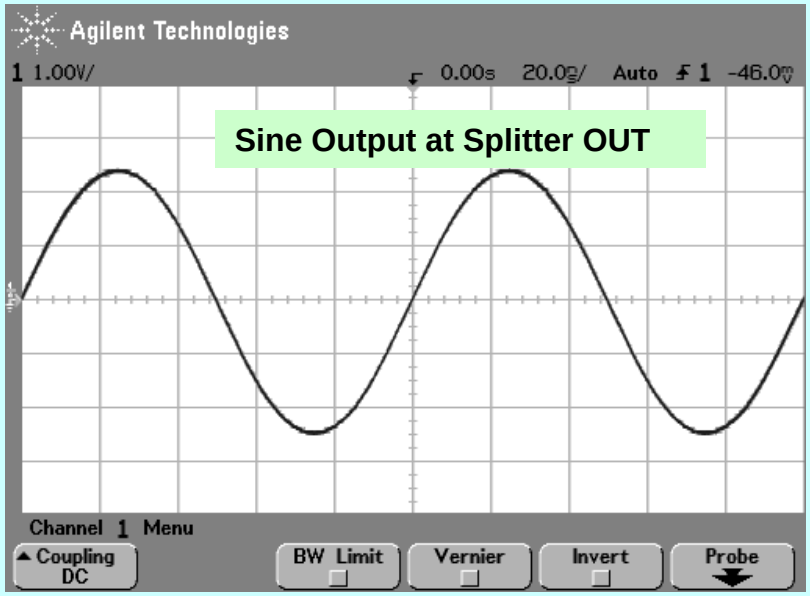
Agilent Technologies
1 1.00V/
0.00s 20.0s/ Auto 1 -46.0m
Sine Output at Splitter OUT
Channel 1 Menu
Coupling DC
BW Limit
Vernier
Invert
Probe

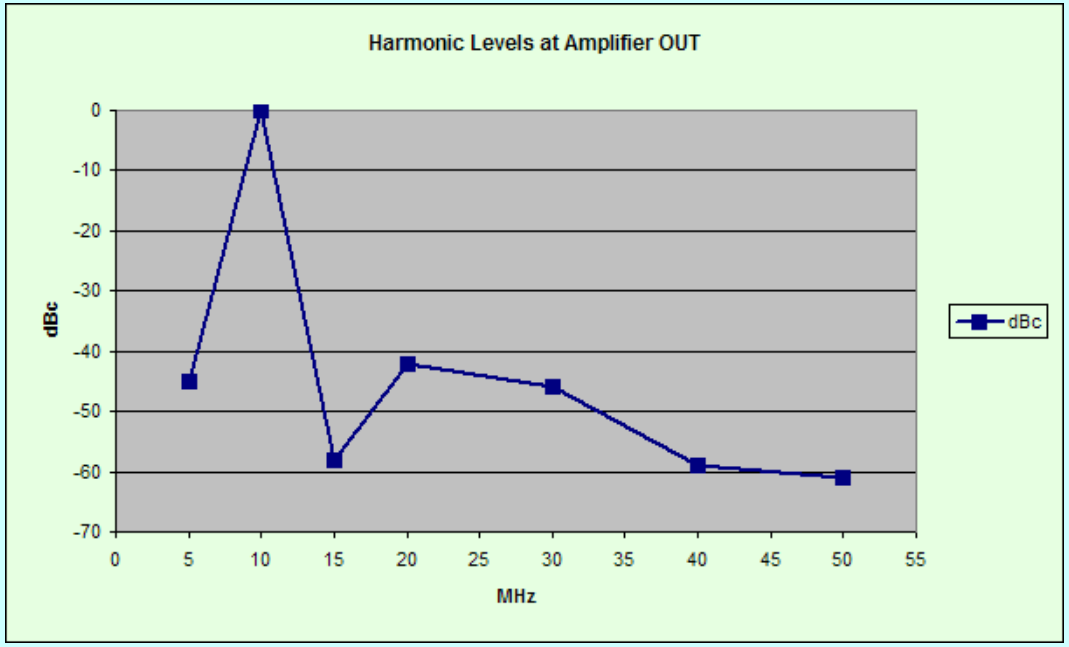
Harmonic Levels at Amplifier OUT
dBc
0
-10
-20
-30
-40
-50
-60
-70
0
5
10
15
20
25
30
35
40
45
50
55
MHz
dBc

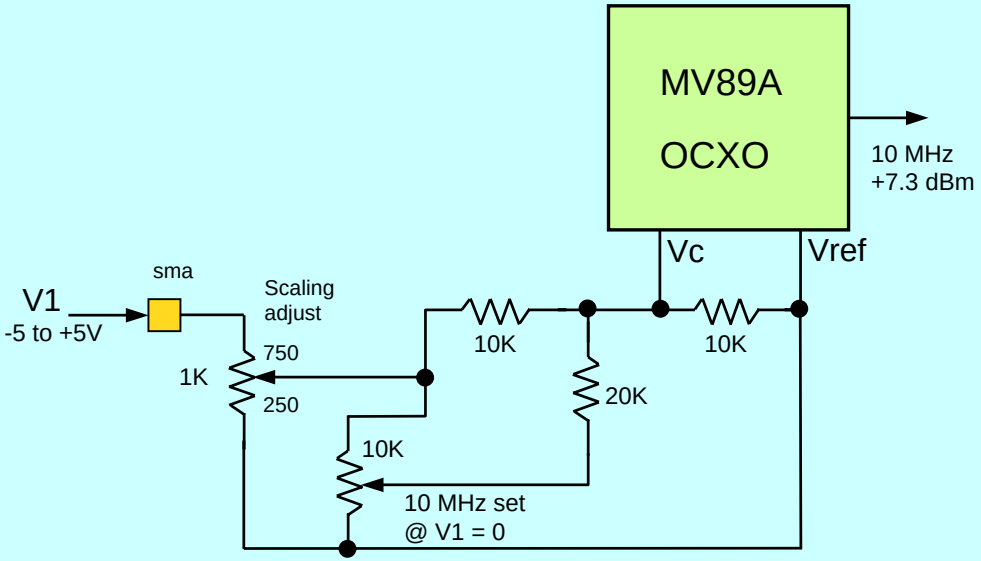

Scaling and Frequency Adjust Circuit

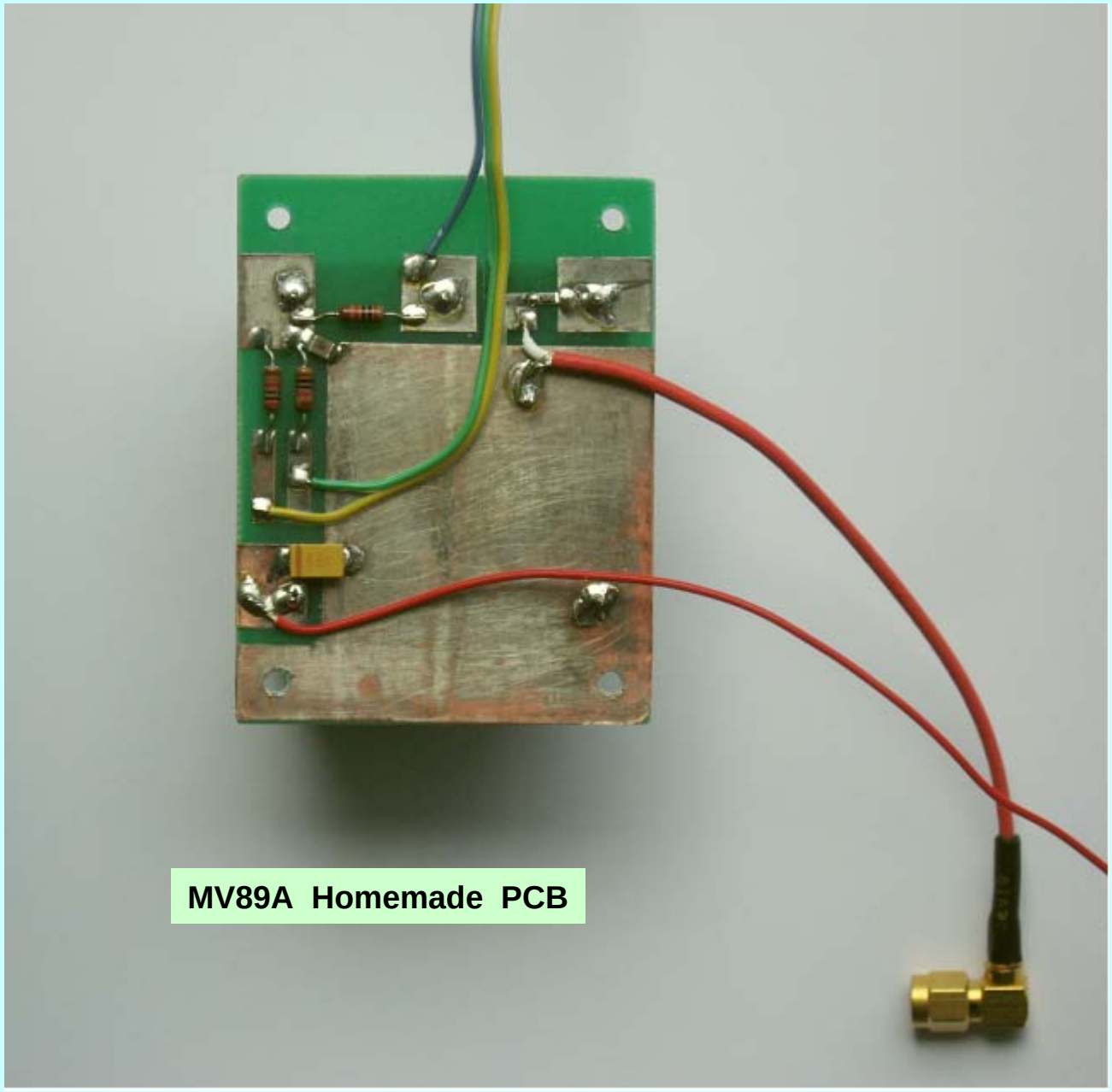
MV89A Homemade PCB

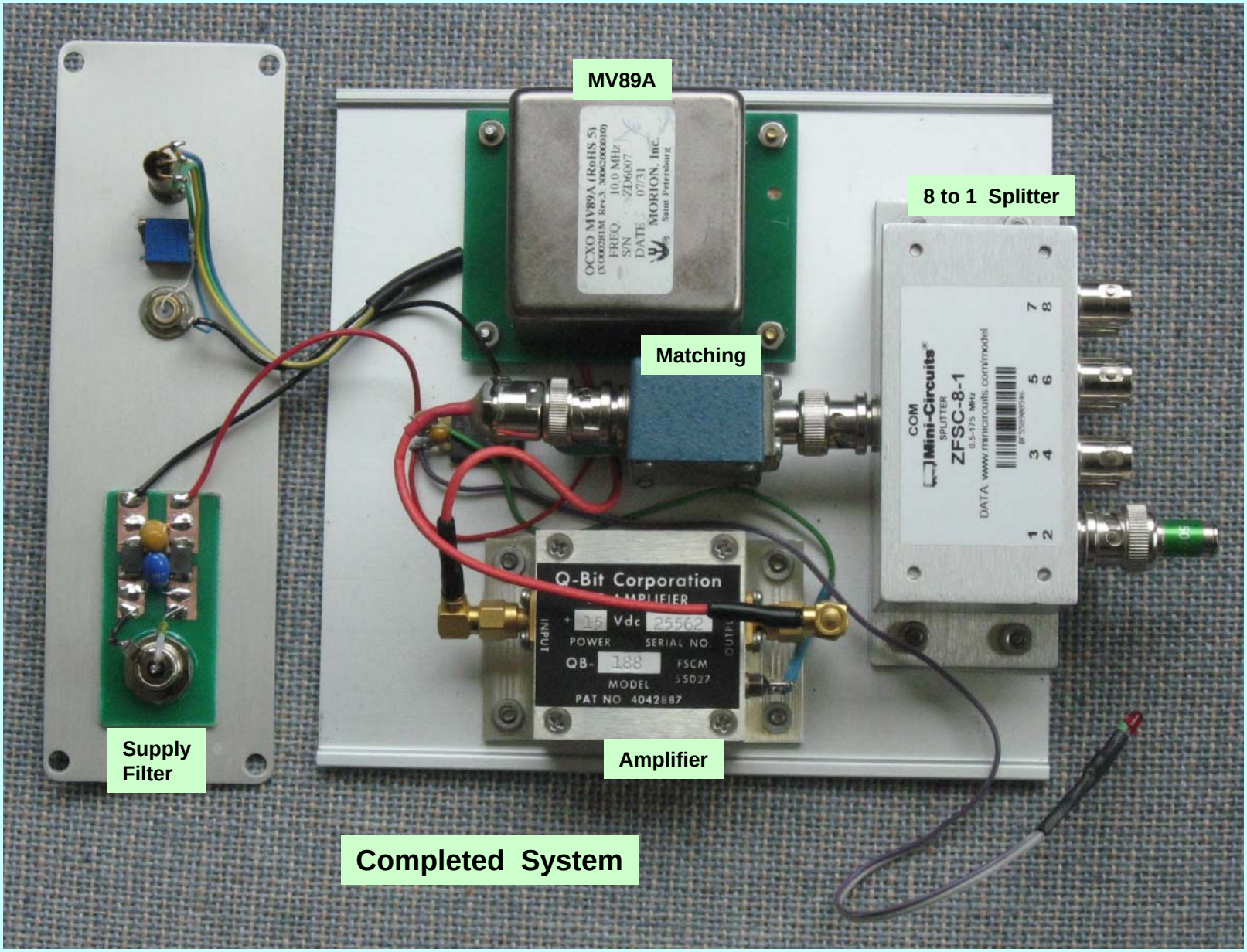

Completed System

As Used with VE2ZAZ Controller

Rear View

Without Controller, Vc IN is shorted

OUTDOOR GPS ANTENNA

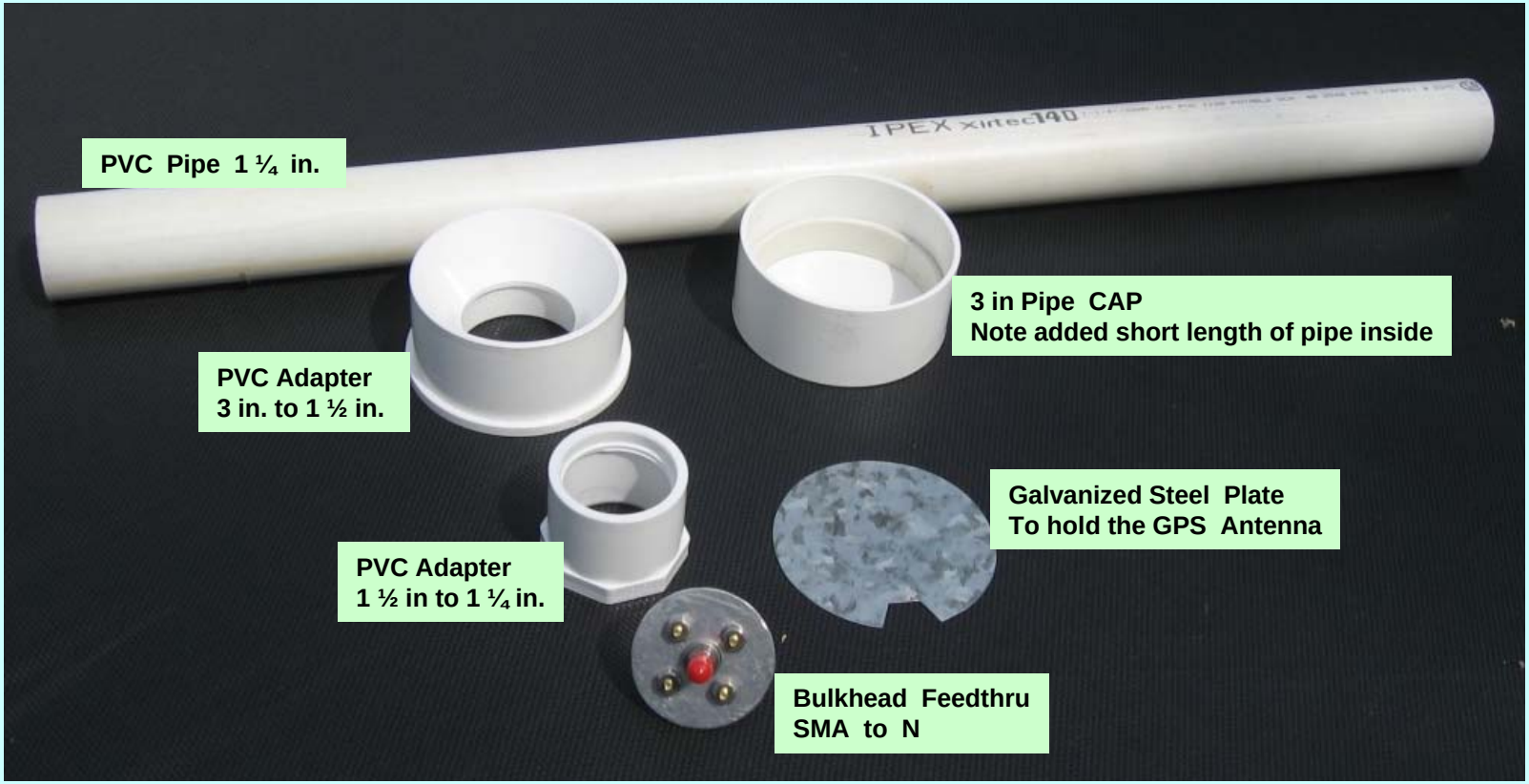

Bulkheag Feedthru
SMA to N Mounted on
PVC Adapter
1 ½ in to 1 ¼ in.

PVC Adapter 3 in. to 1 ½ in.
and SMA to N
Bulkhead Feedthru

GPS Antenna with a short length Of RG-174
Mounts on top of PVC Adapter 3 in. to 1 ½ in.

Completed Antenna
attached to the Roof Side

A NEW HIGH STABILITY DOCXO. STATISTICS OF THE RESULTS OF FREQUENCY STABILITY MEASUREMENTS.

By S.V.Anastasiev, A.A.Volkov, Y.L.Vorokhovsky, Morion, Inc, Phone: 7-812-350-9565; Fax: 7-812-350-7290; St.Petersburg, Russia

SUMMARY

Recently the significant increase of demand for Ultra Stable Quartz Oscillators has been evidenced. Such oscillators are used for many applications including CDMA, GPS/GLONASS, etc. The following major requirements are usually applied for these oscillators: frequency stability vs. Temperature changes of +/-(1..2)*10^{-10}; long term stability of +/-(1..2)*10^{-8}/year; short term stability of <5*10^{-12} for time intervals of 1 through 100 seconds. As the world experience shows, very tight combinations of requirements can be met in Double Oven crystal oscillator (DOCXO). However, development, production and measurement of such DOCXOs is a quite technically complicated task.

In the R&D laboratory of the Morion, Inc. the design of DOCXO was made with parameters satisfying the above mentioned requirements. Also the process of serial production of such DOCXOs has been worked out.

The major parameters of MV89 type DOCXO:

Nominal frequency:	4.096; 5.0; 8.192; 10.0 MHz
Frequency stability in operating temperature range of -20..+70 °C:	±1.0*10^{-10}; ±1.5*10^{-10}; ±2.0*10^{-10};
Aging per day:	±1.0*10^{-10};
Short-term stability for 1..100 s:	<5*10^{-12};
Output level:	>0 dBm into 50 Ohms load;
Power consumption:	<3.5 W (steady state @ 25°C);
Dimensions:	2"*2"*1.5" (50.8*50.8*38mm).

The design of DOCXO is based on previous designs of Morion's precision oscillators and takes into account the modernizing of existing technology.

A new DOCXO has two modifications: MV89A with standard frequencies 8.192, 10 MHz and MV89B – 4.096 and 5.0 MHz. MV89A differs from MV89B by presence of frequency doubler. High quality SC-cut crystals in cold weld package HC40 are used in both modifications. Long term stability of

most of these crystals is enough to meet the specification requirements in serial production.

DOCXO consists of three main parts:

- inner oven with a crystal, oscillator circuitry and VCO;
- outer oven with a thermocontroller of inner oven and reference voltage regulator;
- base plate with a thermocontroller of outer oven and buffer amplifier.

This structure is mounted in hermetically sealed metal case with standard pin-out.

MAIN CHARACTERISTICS OF FREQUENCY STABILITY

Temperature stability.

Frequency stability in ambient temperature range depends on stability of an average temperature of crystal and stability of temperature gradients in the crystal blank. In double oven structure it is possible to achieve the stability of crystal temperature approximately 0.01°C. Calculated temperature gradients are about 0.1°C. It is important to maintain the temperature of oscillator circuit constant to avoid frequency deviation caused by changing of components characteristics. Achieved frequency stability in ambient temperature range -40°C ÷ 75°C for MV89 is shown in Fig.1.

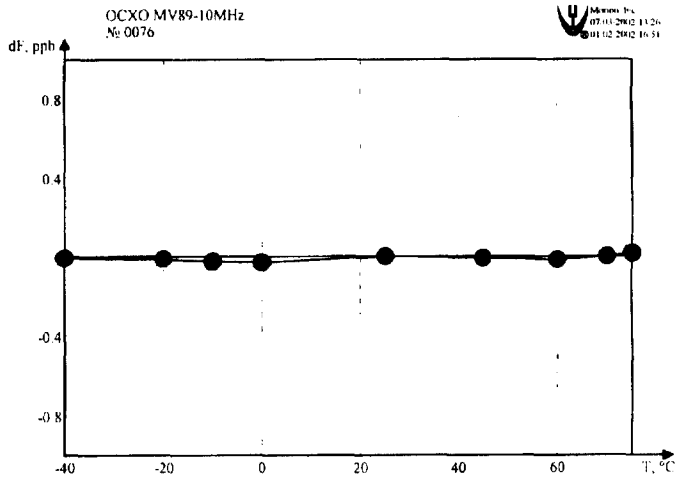

T, °C	Frequency, MHz	Dev., ppb	I, mA
-40	9.999 999 992 278	-0.008 900	712.50
-20	9.999 999 992 207	-0.016 000	582.00
-10	9.999 999 992 120	-0.024 700	524.60
0	9.999 999 992 055	-0.031 200	465.30
25	9.999 999 992 367	0.000 000	318.90
45	9.999 999 992 286	-0.008 100	203.85
60	9.999 999 992 200	-0.016 700	120.88
70	9.999 999 992 347	-0.002 000	66.34
75	9.999 999 992 521	0.015 400	46.14

Checkpoint type	Value	Limit	
{ptpF[-20;60]}	0.031 200	<1ppb	+
{ptpF[-40;75]}	0.046 600	<1ppb	+
{ptpF[-20;70]}	0.031 200	<1ppb	+
{ptpF[-10;70]}	0.031 200	<1ppb	+

Fig.1.

Statistical data shows that 70% of total quantity produced meet $\pm 2*10^{-10}$ in temperature range -40°C ÷ +75°C 90% meet $\pm 2*10^{-10}$ in temperature range -10°C ÷ +70°C. And about 85% meet $\pm 1*10^{-10}$ vs. temperature –10 ÷ +70°C.

Long term stability.

Fig.2 shows typical frequency vs. time characteristic of MV89.

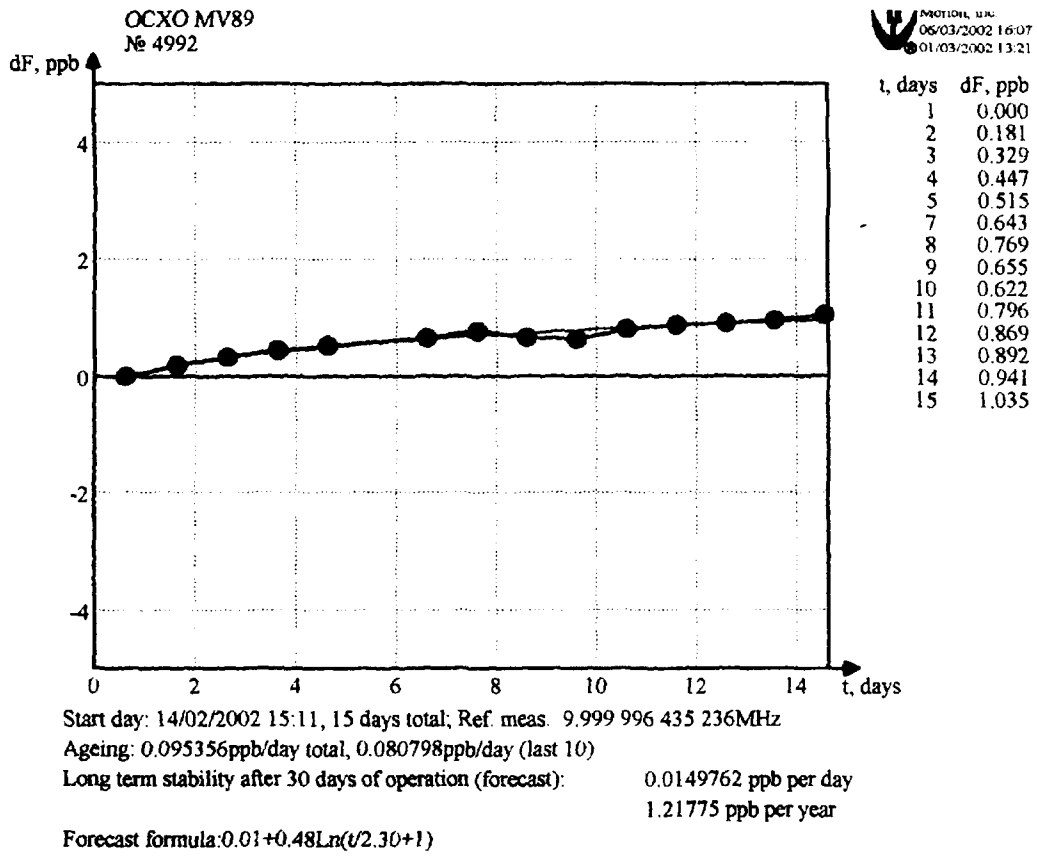

Fig.2.

Long term stability mainly defined by the quality of crystal. More than 80% of crystals used in MV89 meet $\pm 2*10^{-10}$/day and 70% meet $\pm 1*10^{-10}$/day
Those DOCXO reliably have according long term stability in 1st year $\leq \pm 2*10^{-8}$ and $\leq \pm 1*10^{-8}$. They may be reliably delivered for very tight requirements like $\leq \pm 5*10^{-8}$ for 10 years of operation.

Short term stability.

Fig.3 shows typical Allan variance characteristic of MV89.

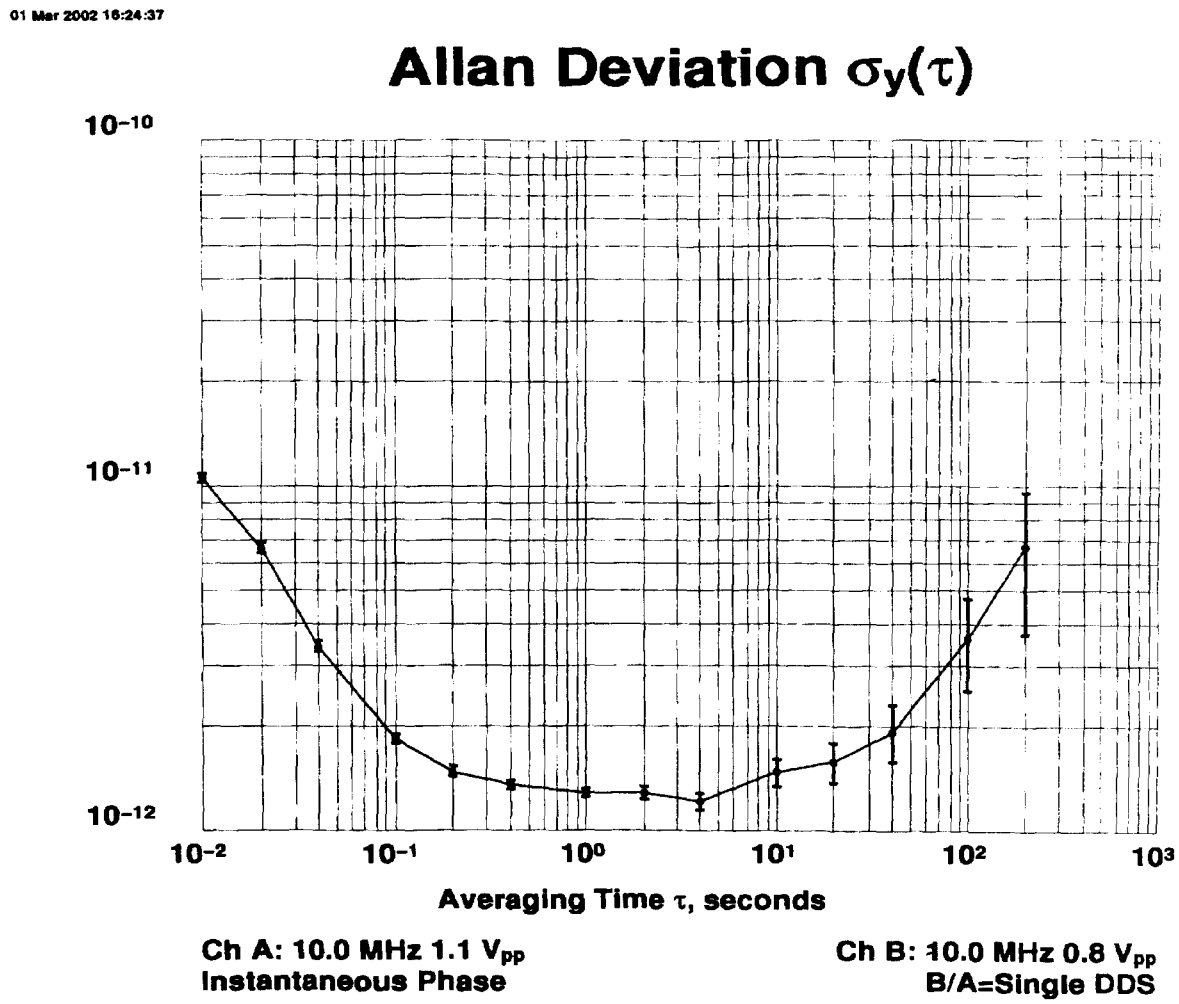

Fig.3.

Statistical data shows that 90% of total quantity meet Allan variance for average time interval

1s – $2*10^{-12}$

10s – $3.5*10^{-12}$

100s – $5.5*10^{-12}$

Phase noise.

Fig.4 shows the typical phase noise plot of MV89A 10 MHz.

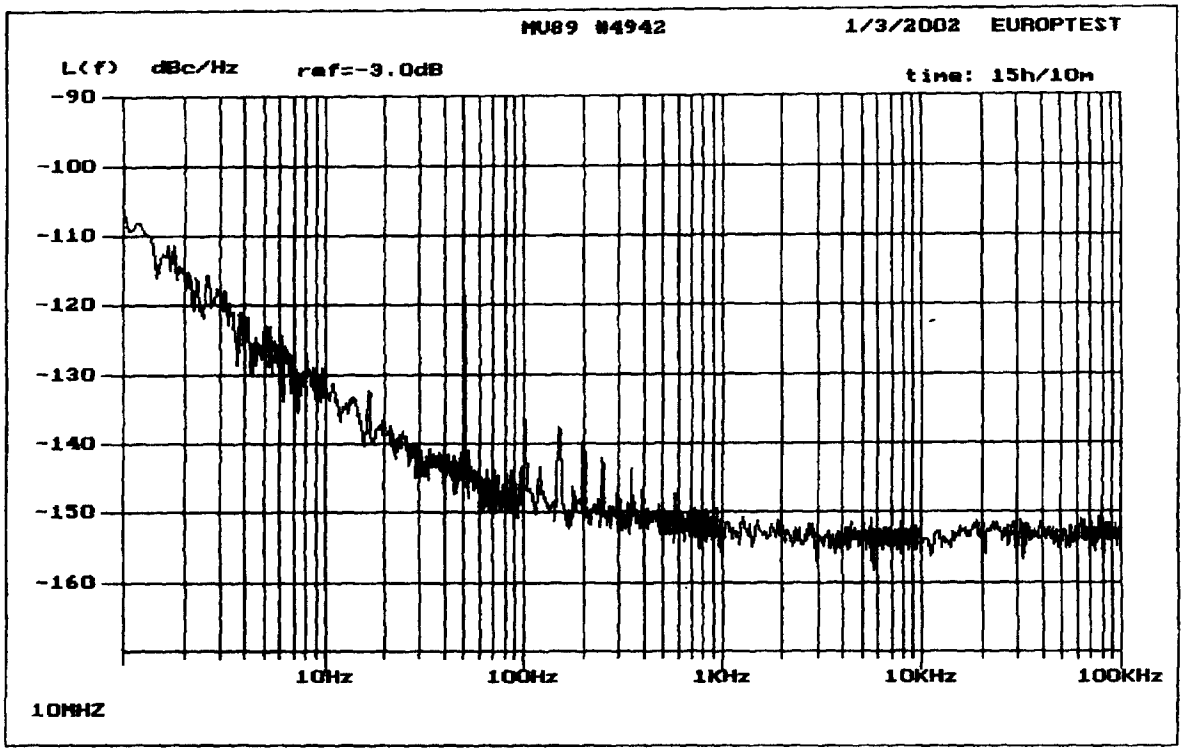

Fig.4.

Statistical data: more than 98% of total quantity of MV89A units meet phase noise

at offset	1 Hz	-100 dBc
	10 Hz	-130 dBc
	100 Hz	-145 dBc
	1000 Hz	-150 dBc

CONCLUSION

The introduced DOCXO is being produced at Morion, Inc. Now our R&D department is working out a new DOCXO with a reduced height and low power consumption.

DOUBLE OVEN ULTRA PRECISION OCXO MV89

Features:

- ***Frequency range 4.096 - 10.0 MHz***
- ***Very high stability vs. temperature - up to ±5x10^{-11}***
- ***Very low aging - up to ±5x10^{-9}/year***
- ***Not sensitive for rapid changes of ambient temperature***
- ***Ideal for GPS, CDMA, 3G applications***

ORDERING GUIDE: MV89 – B 01 E – 10.0 MHz

Availability of certain stability vs. operating temperature range		±3x10^{-10}	±2x10^{-10}	±1x10^{-10}	±5x10^{-11}
		03	02	01	005
A	0…+55 °C	A	A	A	C
B	- 10…+60 °C	A	A	A	C
C	- 20…+70 °C	A	A	A	C
D	-40…+70 °C	A	A	C	NA

A – available, NA – not available, C – consult factory

For other temperature ranges see designation at the end of Data Sheet

Availability of certain aging values for certain frequencies		Standard frequencies			
		4.096 MHz	5.0 MHz	8.192 MHz	10.0 MHz
E	±3x10^{-8}/year	A	A	A	A
D	±2x10^{-8}/year	A	A	A	A
C	±1x10^{-8}/year	C	A	C	A
B	±5x10^{-9}/year	C	A	C	A

A – available NA – not available C – consult factory

Short term stability (Allan deviation) per 1 s, typical	<2x10^{-12}
Frequency stability vs. load changes	<±1x10^{-10}
Frequency stability vs. power supply changes	<±1x10^{-10}
Warm-up time with accuracy of <±5x10^{-8}	<15 min
Power supply (Us)	12V±5%
Steady state current consumption @ 25°C (still air)	< 350 mA
Peak current consumption during warm-up @ 25°C	<1.5 A
Frequency pulling range	>±2.5x10^{-7}
with external control voltage range (Uin)	0…+5 V
Reference voltage (Uref)	+5V

Package drawing:

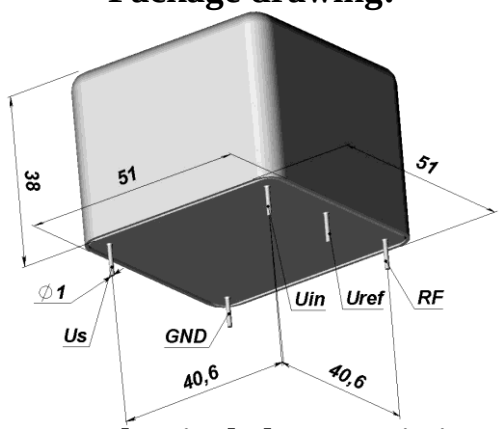

Output	SIN
Level	+7 ±2 dBm
Load	50 Ohm±5%
Subharmonics (for 8.192, 10.0 MHz)	<-40 dBc
Harmonic suppression	>30dBc
Phase noise, typical (for 5 MHz)	
1 Hz	-105 dBc/Hz
10 Hz	-130 dBc/Hz
100 Hz	-145 dBc/Hz
1000 Hz	-150 dBc/Hz
10000 Hz	-155 dBc/Hz

Mechanical characteristics:

Vibrations: Frequency range Acceleration	 1-200 Hz 5g
Shock: Acceleration Duration	 150 g 3±1 ms
Storage temperature range	-55…+80 °C

ADDITIONAL NOTES:

- **Showed values of frequency stability vs. temperature usually are tested in Still Air test conditions. Please inform factory about different conditions in operation to provide appropriate tests.**
- **Please consult factory for daily aging values. Normally typical correspondence of daily aging per day to aging per year is as following: ±5x10^{-8}/year - ±5x10^{-10}/day; ±3x10^{-8}/year - ±3x10^{-10}/day; ±2x10^{-8}/year - ±2x10^{-10}/day; ±1x10^{-8}/year - ±1x10^{-10}/day.**
- **For non standard operating temperature ranges please use the following two letters designations (first letter for the lower limit, second letter for the upper limit), °C:**

A	B	C	D	E	F	G	H	J	K	L	M	N	P	Q	R	S	T	U	W	X
-60	-55	-50	-45	-40	-30	-20	-10	0	+10	+30	+40	+45	+50	+55	+60	+65	+70	+75	+80	+85

MORION, Inc.
13a, KIMa Ave., St.Petersburg, 199155, RUSSIA. http://www.morion.com.ru
Tel:+7-812-350-9243; 332-5032. Fax:+7-812-350-7290. e-mail: sale@morion.com.ru

Revision 1. April 2012